## GENERAL NOTES

THESE INSTALLATION INSTRUCTIONS ARE A SUPPLEMENT TO THE APPROVED SHOP DRAWINGS. USE IN CONJUNCTION WITH THOSE DRAWINGS.

## 1 - HANDLING, STORING AND PROTECTING ALUMINUM MATERIAL.

THE FOLLOWING PRECAUTIONS ARE RECOMMENDED TO ASSURE EARLY ACCEPTANCE OF YOUR PRODUCTS AND WORKMANSHIP.

A - HANDLE CAREFULLY - DO NOT DROP FROM THE TRUCK. STACK WITH ADEQUATE SEPARATION SO MATERIAL WILL NOT RUB TOGETHER. STORE OFF THE GROUND. PROTECT AGAINST ELEMENTS AND OTHER CONSTRUCTION TRADES.

B - KEEP MATERIAL AWAY FROM WATER, MUD AND SPRAY - PREVENT CEMENT, PLASTER AND OTHER MATERIALS FROM DAMAGING THE FINISH.

C - PROTECT THE MATERIALS AFTER ERECTION, BY WRAPPING WITH KRAFT PAPER - OR BY ERECTING VISQUEEN/CANVAS SPLATTER SCREENS. CEMENT, PLASTER, TERRAZZO AND OTHER ALKALINE MATERIALS ARE VERY HARMFUL TO THE FINISH AND SHOULD BE REMOVED WITH WATER AND MILD SOAP BEFORE SETTING OCCURS. UNDER NO CIRCUMSTANCES ALLOW THESE MATERIALS TO DRY OR PERMANENT STAINING WILL OCCUR.

## 2 - GENERAL RULES

THE FOLLOWING PRACTICES ARE RECOMMENDED FOR ALL WALL INSTALLATIONS.

A - READ COMPLETE INSTRUCTIONS BEFORE ORDERING GLASS OR FABRICATING MATERIAL.

B - CHECK SHOP DRAWINGS TO BECOME THOROUGHLY FAMILIAR WITH THE JOB.

C - ALL MATERIALS ARE TO BE INSTALLED PLUMB, LEVEL AND TRUE.

D - ALL WORK SHOULD START FROM ESTABLISHED BENCH MARKS AND COLUMN CENTER LINES ESTABLISHED BY THE ARCHITECTURAL DRAWINGS AND THE GENERAL CONTRACTOR.

E - THE SEQUENCE OF ERECTION SHOULD BE COORDINATED WITH THE JOB SUPERINTENDENT SO DELAYS ARE PREVENTED AND RISK OF MATERIAL DAMAGE IS MINIMIZED.
IF PRESETTING OF ANCHORAGE IS REQUIRED, COORDINATE WITH GENERAL CONTRACTOR AND SUPERVISE LOCATION.

F - MAKE CERTAIN CONSTRUCTION WHICH WILL RECEIVE YOUR MATERIALS IS ACCORDING TO THE CONTRACT DOCUMENTS. IF NOT, NOTIFY THE GENERAL CONTRACTOR IN WRITING AND RESOLVE DIFFERENCES BEFORE PROCEEDING WITH YOUR WORK.

G - INSULATE ALL ALUMINUM TO BE PLACED DIRECTLY IN CONTACT WITH THE MASONRY OR INCOMPATIBLE MATERIALS WITH A HEAVY COAT OF ZINC CHROMATE OR BITUMINOUS PAINT.

H - FOLLOW KAWNEER INSTALLATION AND GLAZING INSTRUCTIONS.

J - CHECK ALL MATERIAL ON ARRIVAL FOR QUANTITY.

K - BE SURE YOU HAVE ALL THE MATERIALS AND TOOLS NEEDED TO BEGIN THE INSTALLATION.

1 - APPROVED SHOP DRAWINGS
2 - LEVEL AND PLUMB (TRANSIT)
3 - FASTENERS AND REQUIRED DRIVERS.
4 - PERIMETERS AND ACCESSORIES SUCH AS ANCHORS, FASTENERS, SLEEVES AND/OR SPLICE CAPS.
5 - SEALING MATERIALS.
6 - GLAZING MATERIALS.

L - FOLLOW SEALANT MANUFACTURER'S RECOMMENDATIONS FOR PROPER SEALANT AND APPLICATION.
ALL SEALANTS AND MASTICS MUST BE COMPATIBLE WITH ALL SURFACES INCLUDING OTHER SEALANT SURFACES.
WHERE REQUIRED ALL SEALANTS MUST ADHERE TO ALL SURFACES INCLUDING OTHER SEALANT SURFACES.

## 1600 SYSTEM $^2$ NOTES

1600 SYSTEM $^2$ IS AVAILABLE WITH 1" FRAMING MEMBERS WHICH ACCEPT BOTH 1" AND 1/4" INFILLS. ALSO 1/4" FRAMING MEMBERS WHICH ACCEPT 1/4" INFILLS ONLY ARE AVAILABLE.

THE TERM "CAPTURED VERTICALS OR CAPTURED HORIZONTALS" WILL BE USED THROUGHOUT THESE INSTRUCTIONS. THIS MEANS FRAMING MEMBERS THAT ACCEPT AN EXTERIOR PRESSURE PLATE AND COVERS. "STRUCTURAL GLAZED VERTICALS" DO NOT ACCEPT EXTERIOR METAL.

GLASS BITE IS 1/2" AT CAPTURED VERTICALS AND HORIZONTALS. GLASS BITE IS 1" AT STRUCTURAL GLAZED VERTICALS. GLASS SIZES MUST BE CALCULATED FROM APPROVED SHOP DRAWINGS.

UNLESS OTHERWISE SPECIFIED, IT IS RECOMMENDED THAT SILICONE SEALANT BE USED FOR ALL INTERNAL SEALS.

SEALANT MUST BE APPLIED PER THE SEALANT MANUFACTURER'S RECOMMENDATIONS AND PASS ALL ADHESION AND COMPATIBILITY TESTING.
AT ALL JOINT SEALS, SEALANT MUST ADHERE TO METAL, GASKETS, THERMAL SEPARATOR AND JOINT PLUG MATERIALS.
CLEAN ALL SURFACES PRIOR TO APPLICATION OF SEALANT AND PRIME WHERE NECESSARY TO ACHIEVE PROPER ADHESION.

VERTICAL MULLION SPLICE -
VERTICAL MULLIONS THAT ARE STRUCTURALLY GLAZED MUST BE SPLICED AT A HORIZONTAL. LOCATION OF THIS SPLICE MUST BE REVIEWED FOR STRUCTURAL INTEGRITY BY FACTORY ENGINEERING.

SHIM ALL SILL HORIZONTALS AT SETTING BLOCK LOCATIONS.

TYPICAL SPLICE LOCATION VISION OVER SPANDREL HORIZONTAL

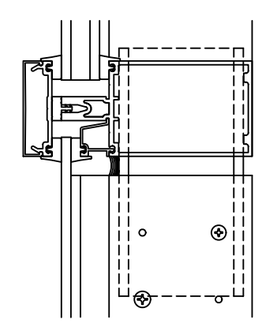

## STRUCTURAL SEAL NOTES

STRUCTURAL SILICONE SEAL - THE GLAZING INSTALLER IS RESPONSIBLE FOR SELECTING AND CONTACTING THE SILICONE MANUFACTURER TO DETERMINE WHICH TYPE OF SILICONE IS TO BE USED AND WHAT SAMPLES ARE REQUIRED TO BE SUBMITTED FOR ADHESION AND COMPATIBILITY TESTING.

THE SILICONE SEALANT SHALL NOT BE APPLIED TO KAWNEER PRODUCTS WITHOUT THE APPROVAL OF THE SILICONE MANUFACTURER AND UNTIL ALL REQUIRED TESTING IS COMPLETED AND DETAILED APPLICATION INSTRUCTIONS HAVE BEEN DELIVERED TO THE INSTALLER BY THE SILICONE MANUFACTURER.

IF YOU FIND THE SILICONE MANUFACTURER'S INSTALLATION INSTRUCTIONS ARE NOT IN ACCORDANCE WITH KAWNEER'S INSTALLATION INSTRUCTIONS, IT IS YOUR RESPONSIBILITY TO NOTIFY KAWNEER OF THIS CONFLICT PRIOR TO GLAZING.

YOUR GLASS SUPPLIER MUST BE MADE AWARE THAT THEIR GLASS WILL BE USED IN A SSG APPLICATION. THE APPLICATION MUST BE APPROVED BY THE GLASS SUPPLIER PRIOR TO GLAZING.

ANY STRUCTURAL SILICONE GLAZED PRODUCT APPLICATION THAT IS NOT SHOWN IN KAWNEER'S STANDARD PRODUCT LITERATURE MUST BE PRE-APPROVED BY KAWNEER.

EXTERIOR GLASS WEATHER SEAL - SEALANT TO BE A TYPE AS RECOMMENDED BY THE MANUFACTURER OF THE STRUCTURAL SEALANT BEING USED FOR THIS PROJECT.
SEALANT MUST BE APPLIED PER THE SEALANT MANUFACTURER'S RECOMMENDATIONS.
WEATHER SEAL SEALANT MUST ADHERE TO EXTERIOR GASKET MATERIAL.

KAWNEER

1600 SYSTEM $^2$
INSTALLATION INSTRUCTIONS

PART NO.
162-971 1 OF 12

95449-87
02/17/12

DRAWING:

ORDER:

SHT:

## OPEN BACK HORIZONTAL NOTES

THE OPEN BACK HORIZONTAL IS TO BE TYPICALLY USED FOR ALL HEAD/SILL AND LAST BAY INTERMEDIATE HORIZONTALS.

THE OPEN BACK HORIZONTAL CAN BE USED AT OTHER CONDITIONS IF IT IS AN ADVANTAGE TO THE JOB DESIGN.

THE SHEAR BLOCK AT ALL OPEN BACK INTERMEDIATE HORIZONTALS HAS THE OPTION TO BE PRE-INSTALLED INTO THE HORIZONTAL BEFORE HORIZONTALS ARE INSTALLED

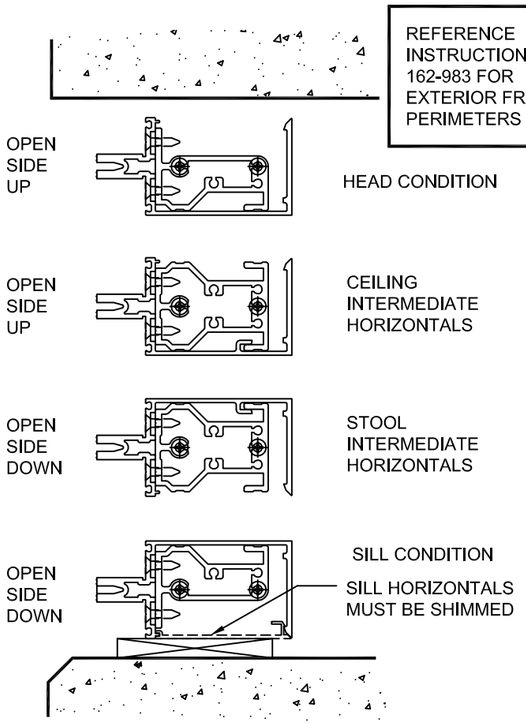


WHEN THE OPEN SIDE OF THE OPEN BACK HORIZONTAL IS EXPOSED AND AT EYE LEVEL A SNAP-IN FILLER IS AVAILABLE.

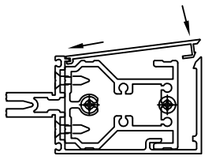

WHEN THE SNAP-IN FILLER IS NOT USED, AND DUE TO STANDARD COMMERCIAL EXTRUDING TOLERANCES, IT MAY BE REQUIRED TO USE A 4" PIECE OF THE FILLER AT EACH END OF A HORIZONTAL.

USE PART 162-316 FOR THE 6" DEEP SYSTEM
USE PART 162-317 FOR THE 7-1/2" DEEP SYSTEM

## OPEN BACK HORIZONTALS AT 90° AND 135° CORNERS

WHENEVER POSSIBLE AVOID USING OPEN BACK HORIZONTALS AT 90° AND 135° CORNERS. IF USING THE OPEN BACK HORIZONTAL BECOMES ABSOLUTELY NECESSARY THE SHEAR BLOCK CONNECTION WILL BE AS SHOWN BELOW.

ALSO REFER TO CORNER INSTRUCTIONS 162-973

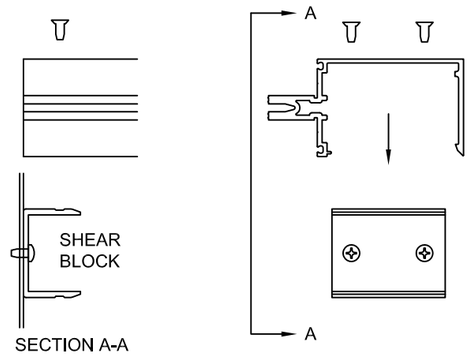


THE OPEN SIDE OF THE OPEN BACK HORIZONTAL IS TO BE POSITIONED AS SHOWN BELOW. THE INTERMEDIATE HORIZONTAL IS POSITIONED OPEN SIDE DOWN FOR DEAD LOAD SUPPORT.

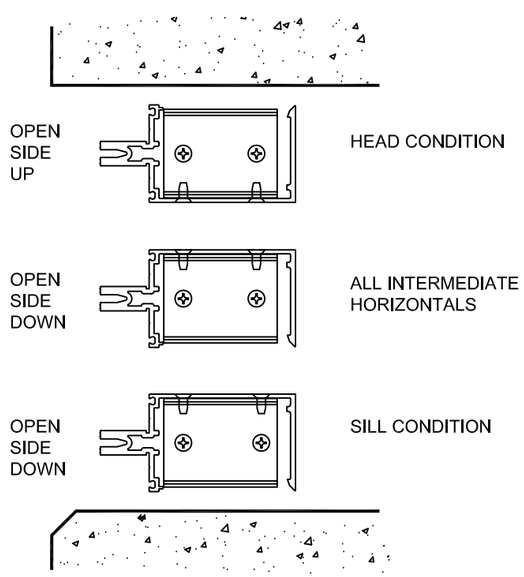


## STEP - 1 CHECK OPENINGS

ELEVATIONS AND SLABS MUST BE WITHIN ADJUSTMENT OF ANCHORING SYSTEM. SEE APPROVED SHOP DRAWINGS FOR ALLOWABLE ADJUSTMENT.

ANCHORING SURFACES OF PERIMETER CONSTRUCTION MUST BE LEVEL AND PLUMB WITHIN THE ADJUSTMENT LIMITS OF THE HEAD, SILL AND JAMB. SEE APPROVED SHOP DRAWINGS FOR ALLOWABLE ADJUSTMENT.

## STEP - 2 LAY OUT ANCHOR AND MULLION CENTERLINES

USE WALL LINES ESTABLISHED BY THE GENERAL CONTRACTOR. ON EACH FLOOR LAY OUT A REFERENCE LINE TO ESTABLISH IN AND OUT WALL LOCATIONS.

USE COLUMN CENTER LINES ESTABLISHED BY THE GENERAL CONTRACTOR. ON EACH FLOOR LAY OUT MULLION CENTER LINES AND ANCHOR CENTER LINES.

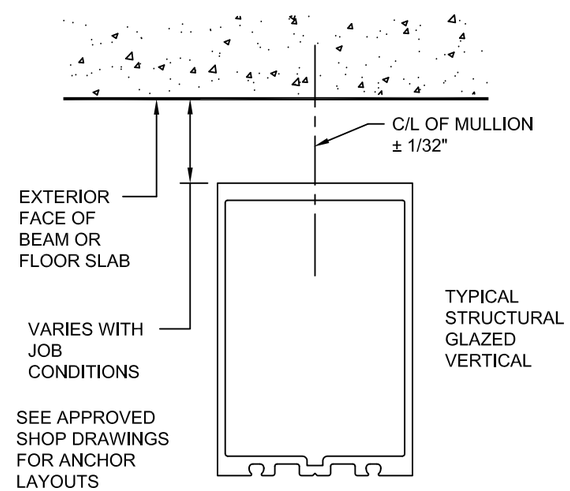


SEE APPROVED SHOP DRAWINGS FOR ANCHOR LAYOUTS

## STEP - 3 INSTALL PRE-SET ANCHORS IF APPLICABLE

USING LOCATION LINES PREVIOUSLY ESTABLISHED INSTALL PRE-SET ANCHORS IN PLACE PER APPROVED SHOP DRAWINGS.

KAWNEER
AN ALCOA COMPANY

1600 SYSTEM 2
INSTALLATION INSTRUCTIONS

PART NO.
162-971 2 OF 12

95449-094
04/26/13

DRAWING:

ORDER:

SHT:

## STEP - 4 FRAME ASSEMBLY

ATTACH ANCHORS TO MULLIONS WHERE APPLICABLE.

ANCHOR PREP MAY BE FABRICATED IN THE FIELD OR FACTORY. CONSULT APPROVED SHOP DRAWINGS FOR CORRECT METHOD.

STANDARD ANCHOR PREP IS THRU-BOLTED AT INTERMEDIATE VERTICALS AND TAPPING PLATES ARE USED AT JAMB VERTICALS. REFER TO APPROVED SHOP DRAWINGS FOR CORRECT METHOD.

WHEN WELDING ANCHORS, PROTECT INSTALLED GLASS AND METAL FROM WELD SPLATTER.

DETAILS SAME FOR "CAPTURED VERTICALS"

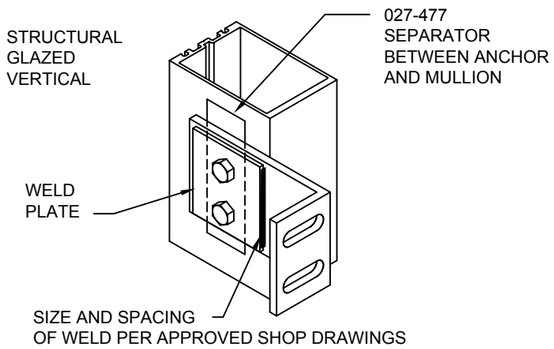


DO NOT OVER TIGHTEN ANCHOR CONNECTIONS. TIGHTEN TO A "SNUG TIGHT" POSITION WITH PARTS BROUGHT INTO GOOD CONTACT. BE SURE ANY SPRING TYPE LOCK WASHERS ARE COMPRESSED. THEN TIGHTEN APPROXIMATELY 1/2 MORE TURN.

ATTACH SHEAR BLOCKS.
STRUCTURAL GLAZED VERTICAL

DETAILS SIMILAR FOR "CAPTURED VERTICALS"

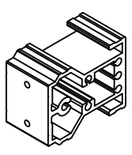

TYPICAL INTERMEDIATE SHEAR BLOCKS
162-377 6" SYSTEM
162-378 7 1/2" SYSTEM

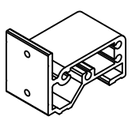

HEAD AND SILL SHEAR BLOCKS
162-331 6" SYSTEM
162-332 7 1/2" SYSTEM

REFERENCE INSTRUCTIONS 162-983 FOR EXTERIOR FRAME PERIMETERS HEAD AND SILL SHEAR BLOCKS
162-384 6" SYSTEM
162-385 7 1/2" SYSTEM

## STEP - 4 FRAME ASSEMBLY

ATTACH SHEAR BLOCKS.

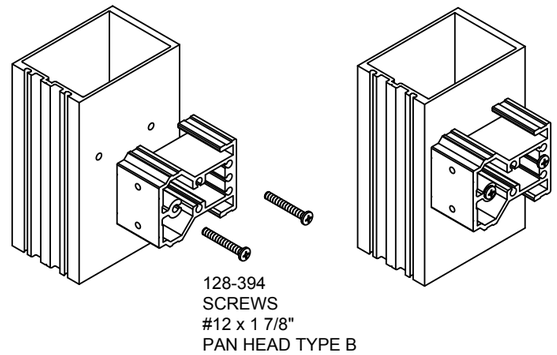


HEAD/SILL SHEAR BLOCK/ANCHOR WHERE APPLICABLE AND SHOWN BELOW.

162-314 6" SYSTEM AT JAMBS
162-315 7 1/2" SYSTEM AT JAMBS
162-342 6" SYSTEM AT MULLIONS
162-343 7 1/2" SYSTEM AT MULLIONS

STRUCTURAL INTEGRITY OF ANCHOR AND FASTENERS MUST BE CHECKED BY FACTORY ENGINEERS.

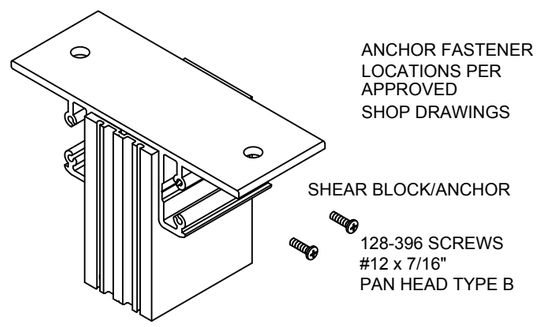


## STEP - 5 INSTALL 162-310 THERMAL BREAK

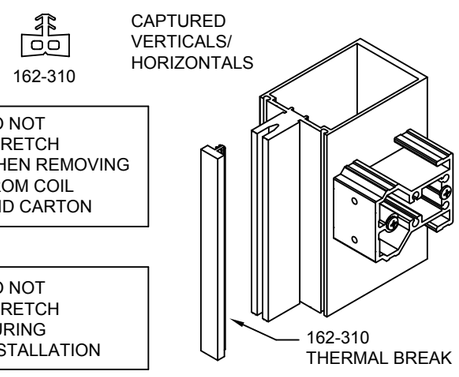


DO NOT STRETCH WHEN REMOVING FROM COIL AND CARTON

DO NOT STRETCH DURING INSTALLATION

## STEP - 5 INSTALL 162-310 THERMAL BREAK

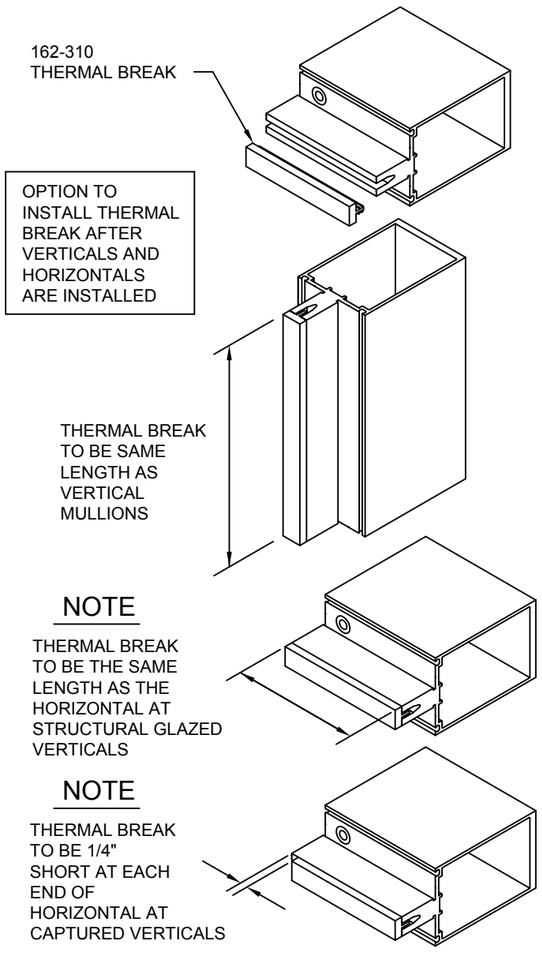


OPTION TO INSTALL THERMAL BREAK AFTER VERTICALS AND HORIZONTALS ARE INSTALLED

NOTE

THERMAL BREAK TO BE THE SAME LENGTH AS THE HORIZONTAL AT STRUCTURAL GLAZED VERTICALS

NOTE

THERMAL BREAK TO BE 1/4" SHORT AT EACH END OF HORIZONTAL AT CAPTURED VERTICALS

FOR CAPTURED VERTICALS

INSTALL HEAD AND SILL END CAPS
162-388 1" FRAMING
162-389 1/4" FRAMING
SET IN SEALANT

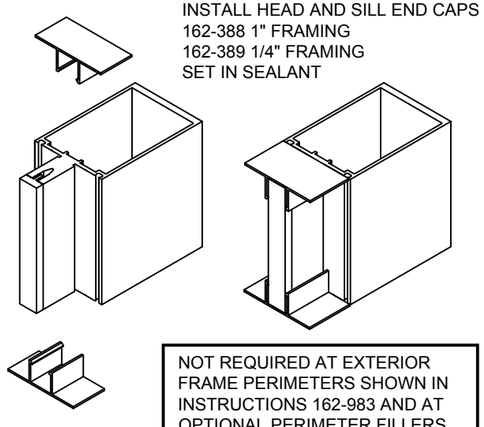

NOT REQUIRED AT EXTERIOR FRAME PERIMETERS SHOWN IN INSTRUCTIONS 162-983 AND AT OPTIONAL PERIMETER FILLERS 162-022 AND 162-023.

## STEP - 6 PERIMETERS WHERE APPLICABLE

INSTALL PERIMETER MEMBERS PER APPROVED SHOP DRAWINGS. PERIMETER MEMBERS CAN OCCUR AT HEAD, SILL OR JAMB CONDITIONS.

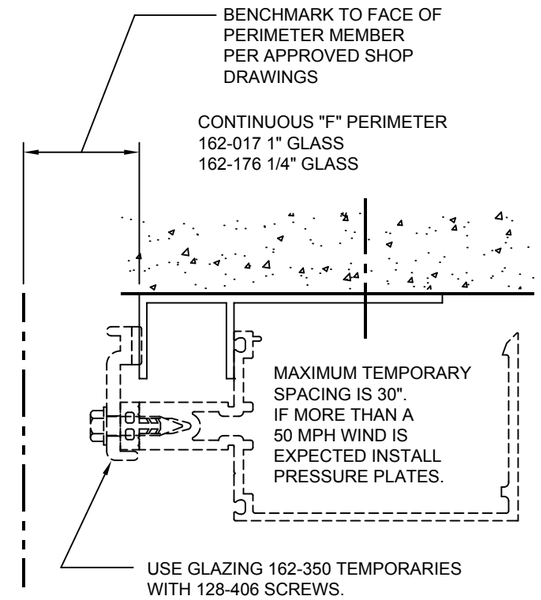


## STEP - 7 INSTALL VERTICAL MULLIONS

DIMENSION BUILDUP CHECK

CHECK OVERALL FRAME DIMENSIONS ABOUT EVERY FIVE MULLIONS ON LONG RUNS. THIS IS TO AVOID DIMENSION BUILDUP.

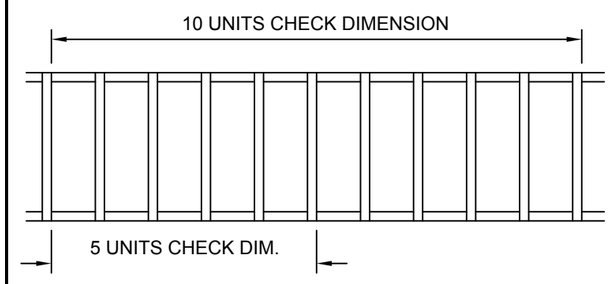


KAWNEER

1600 SYSTEM 2
INSTALLATION INSTRUCTIONS

PART NO.
162-971 3 OF 12

95449-69
10/20/07

DRAWING:

ORDER:

SHT:

## STEP - 7 INSTALL VERTICAL MULLIONS

STRUCTURAL GLAZED VERTICALS

DETAILS SIMILAR FOR "CAPTURED VERTICALS"

"F" OR "T" ANCHORS WHERE APPLICABLE

"F" AND "T" ANCHOR FASTENER LOCATIONS PER APPROVED SHOP DRAWINGS

REFERENCE INSTRUCTIONS 162-983 FOR EXTERIOR FRAME PERIMETERS

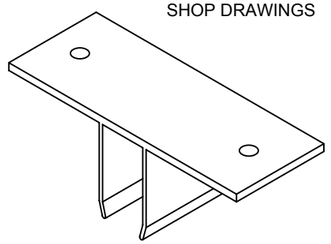

THESE SHEAR BLOCKS MAY NEED TO BE REMOVED TO INSTALL A ANCHOR FASTENER THAT MIGHT BE LOCATED CLOSE TO THE MULLION

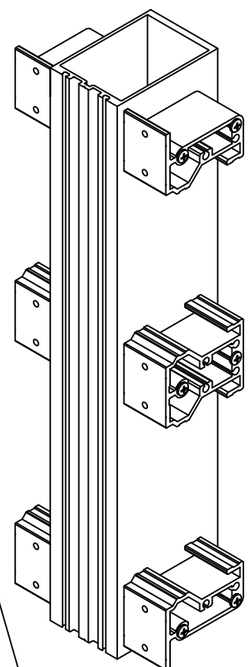

"F" AND "T" ANCHOR FASTENER LOCATIONS PER APPROVED SHOP DRAWINGS

AT MULLION JAMB SIDE, APPLY (2) 128-396 SCREWS AS SHOWN TO CENTER F-CLIPS AS REQUIRED.

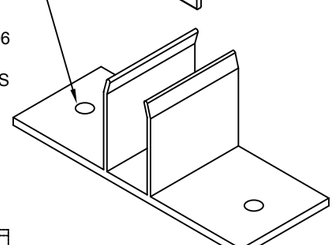

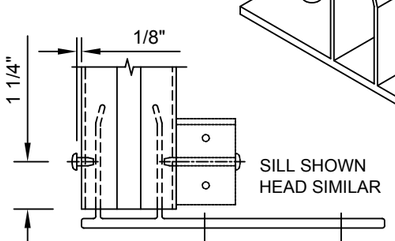


SILL SHOWN HEAD SIMILAR

## STEP - 7 INSTALL VERTICAL MULLIONS

STRUCTURAL GLAZED VERTICALS

DETAILS SIMILAR FOR "CAPTURED VERTICALS"

HEAD/SILL SHEAR BLOCK/ANCHOR WHERE APPLICABLE.

CAN NOT BE USED WITH EXTERIOR FRAME PERIMETERS SHOWN ON INSTRUCTIONS 162-983

162-314 6" SYSTEM AT JAMBS
162-315 7 1/2" SYSTEM AT JAMBS
162-342 6" SYSTEM AT MULLIONS
162-343 7 1/2" SYSTEM AT MULLIONS

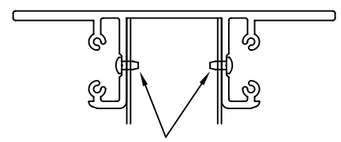

128-396 SCREWS
#12 x 7/16"
PAN HEAD TYPE B

128-284 SCREWS
#12 x 1 1/2
FLAT HEAD
TYPE AB
FOR HORIZONTAL ATTACHMENT

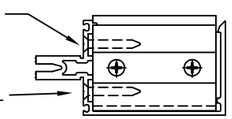

THE ABOVE SCREWS ARE ONLY USED AT THE OPTIONAL SHEAR BLOCK/ANCHORS.

STRUCTURAL SHIMMING IS REQUIRED AT SILL TO ACCOMPLISH DESIGNED PERIMETER SEAL WIDTH.

ANCHOR FASTENER LOCATIONS PER APPROVED SHOP DRAWINGS

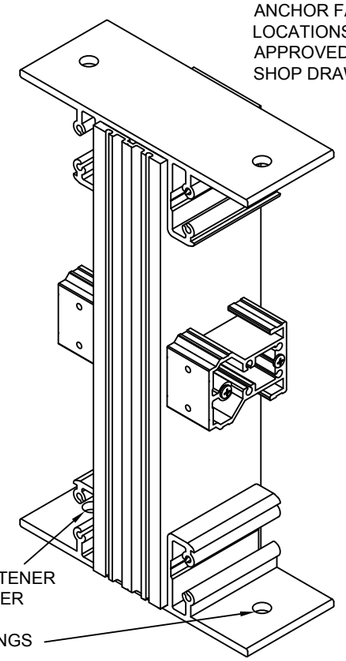

ANCHOR FASTENER LOCATIONS PER APPROVED SHOP DRAWINGS

## STEP - 7 INSTALL VERTICAL MULLIONS

VERTICAL SPLICE JOINTS WHERE APPLICABLE.

CAPTURED VERTICALS

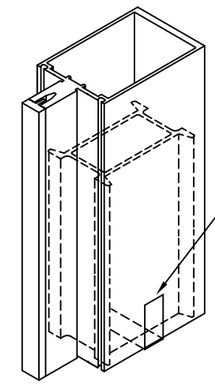

SLEEVE IS FACTORY TAPED INTO THE BOTTOM OF THE TOP VERTICAL.

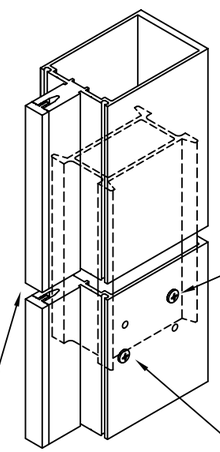

REMOVE THE TAPE AND LET THE SLEEVE SLIDE DOWN TO THE FACTORY APPLIED STOP SCREW

FIELD APPLIED FIXING SCREW 128-348 #10 x 1 1/4" FLAT HEAD SELF DRILLING.

SHOP APPLIED STOP SCREW 128-267 #12 x 1" PAN HEAD TYPE AB

USE TEMPORARY SPACERS FOR JOINT DIMENSION

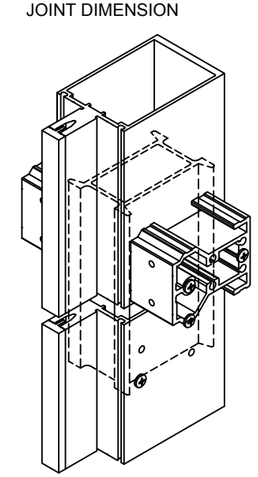

SPLICE JOINT WHEN IT OCCURS AT A HORIZONTAL.

## STEP - 7 INSTALL VERTICAL MULLIONS

VERTICAL SPLICE JOINTS WHERE APPLICABLE.

STRUCTURAL GLAZED VERTICALS

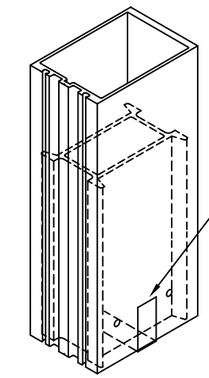

SLEEVE IS FACTORY TAPED INTO THE BOTTOM OF THE TOP VERTICAL.

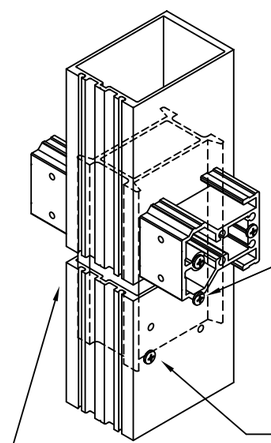

REMOVE THE TAPE AND LET THE SLEEVE SLIDE DOWN TO THE FACTORY APPLIED STOP SCREW

FIELD APPLIED FIXING SCREW 128-348 #10 x 1 1/4" FLAT HEAD SELF DRILLING.

SHOP APPLIED STOP SCREW 128-267 #12 x 1" PAN HEAD TYPE AB

USE TEMPORARY SPACERS FOR JOINT DIMENSION

KAWNEER

1600 SYSTEM 2

INSTALLATION INSTRUCTIONS

PART NO. 162-971 4 OF 12

95449-69
10/20/07

DRAWING:

ORDER:

SHT:

## STEP - 8 INSTALL HEAD/SILL AND INTERMEDIATE HORIZONTALS

TUBULAR HORIZONTALS

STRUCTURAL GLAZED VERTICALS

DETAILS SAME FOR "CAPTURED VERTICALS" EXCEPT HORIZONTAL THERMAL BREAK CUT 1/4" SHORT EACH END.

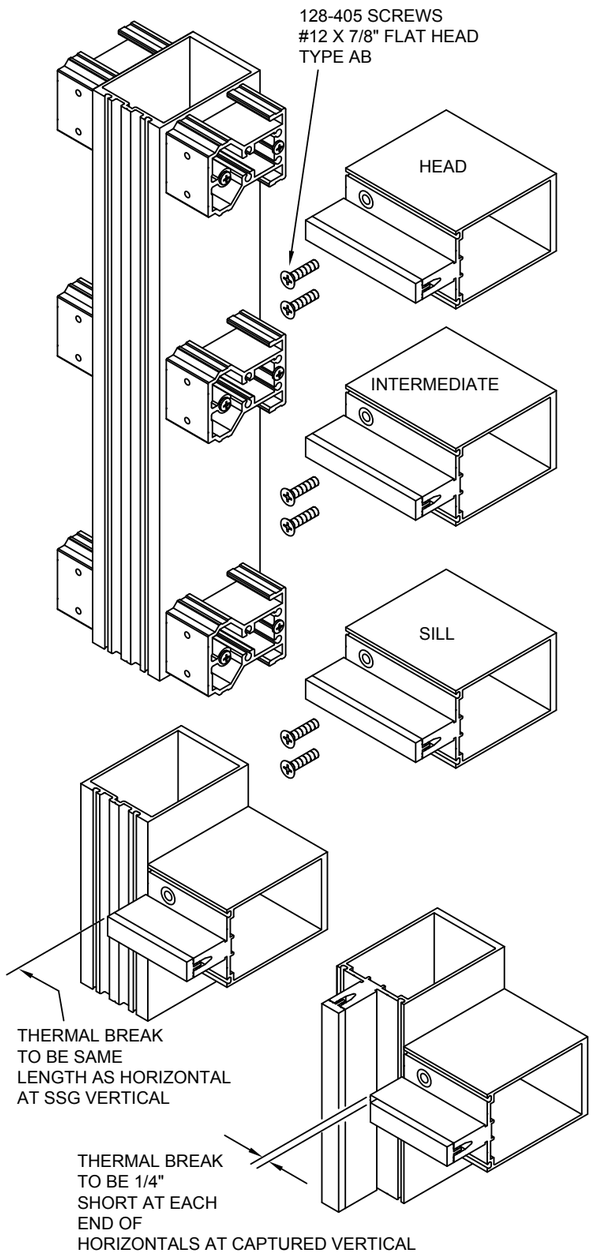


## STEP - 8 INSTALL HEAD/SILL AND INTERMEDIATE HORIZONTALS

REFERENCE INSTRUCTIONS 162-983 FOR EXTERIOR FRAME PERIMETERS

OPEN BACK HORIZONTALS AND LAST BAY HORIZONTALS.
FILLER AVAILABLE WHEN OPEN BACK IS EXPOSED AND AT EYE LEVEL.

STRUCTURAL GLAZED VERTICALS

DETAILS SAME FOR "CAPTURED VERTICALS" EXCEPT HORIZONTAL THERMAL BREAK CUT 1/4" SHORT EACH END.

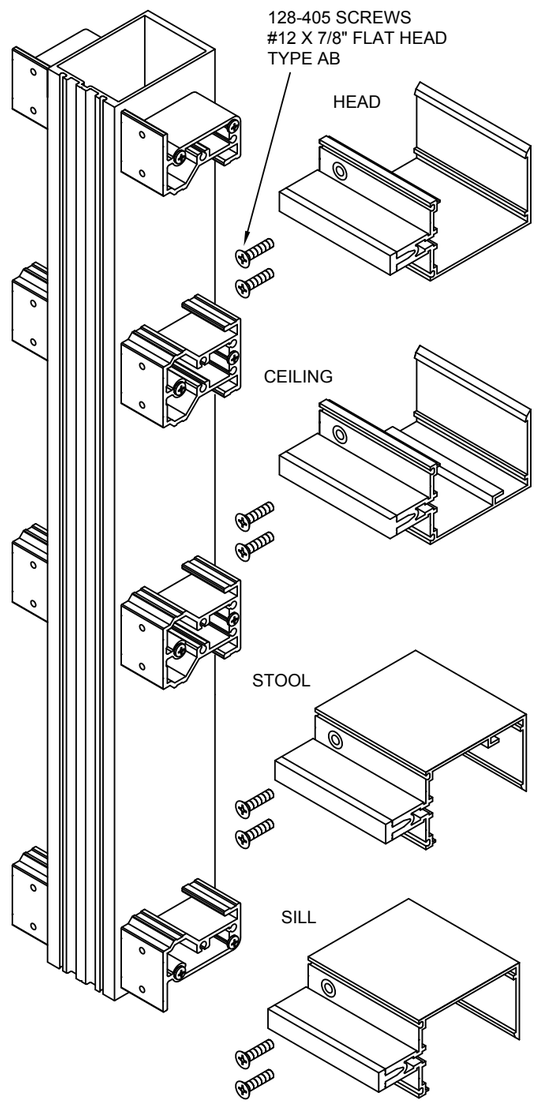


INSTALLING CEILING INTERMEDIATE OPEN BACK HORIZONTAL

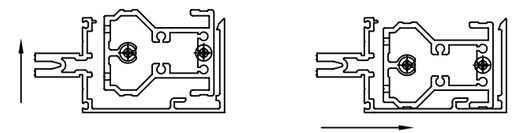

INSTALLING STOOL INTERMEDIATE OPEN BACK HORIZONTAL

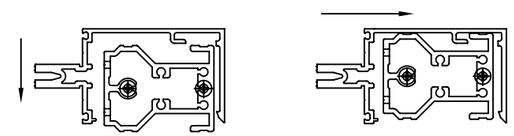

## STEP - 9 INSTALL JOINT PLUGS

CAPTURED GLAZED VERTICALS

ALL SURFACES AND GROOVES MUST BE CLEANED PER THE SEALANT MANUFACTURER'S RECOMMENDATIONS.

JUST BEFORE INSTALLING JOINT PLUGS APPLY SEALANT AS SHOWN FILLING GASKET POCKET AND ADAPTER GROOVE.

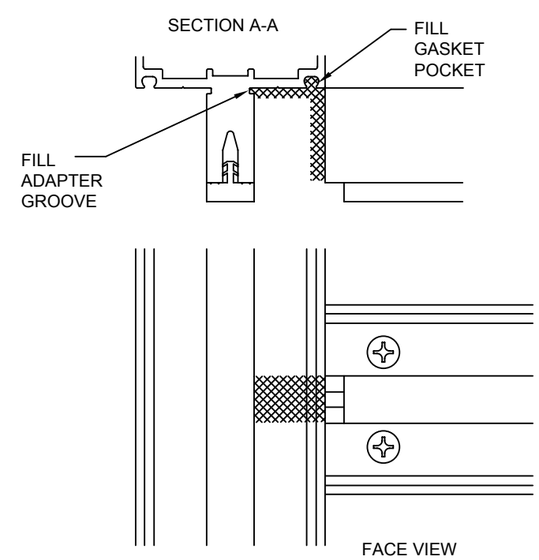


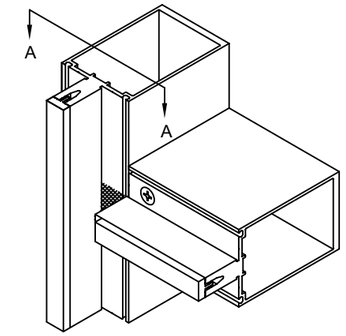


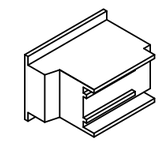

JOINT PLUG
162-321 1" FRAMING
162-322 1/4" FRAME MEMBERS

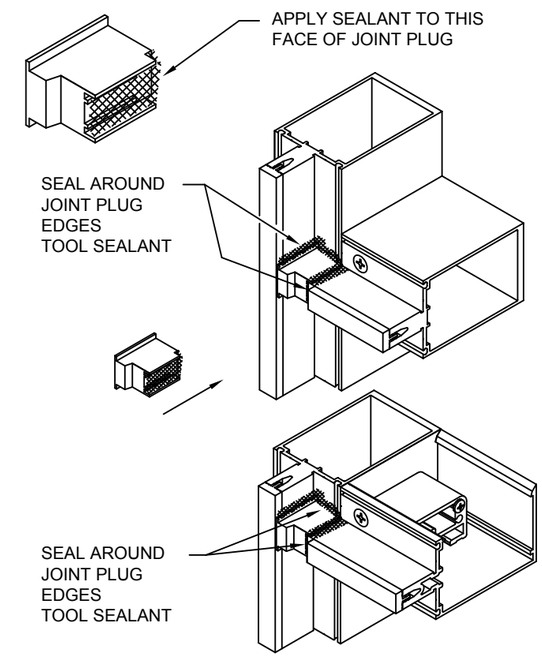


REFERENCE INSTRUCTIONS 162-983 FOR EXTERIOR FRAME PERIMETERS

KAWNEER

1600 SYSTEM 2
INSTALLATION INSTRUCTIONS

PART NO.
162-971 5 OF 12

95449-69
10/20/07

DRAWING:

ORDER:

SHT:

## STEP - 9 INSTALL JOINT PLUGS

STRUCTURAL GLAZED VERTICALS

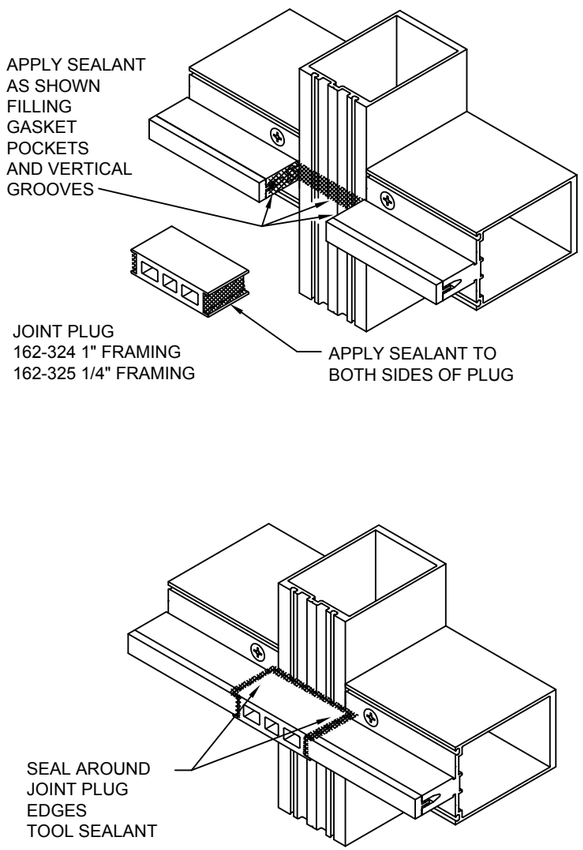


## STEP - 10 INSTALL PERIMETER FILLERS AND SPANDREL ADAPTERS WHERE APPLICABLE

CAPTURED VERTICALS

ALL SURFACES AND GROOVES MUST BE CLEANED PER THE SEALANT MANUFACTURER'S RECOMMENDATIONS.

JUST BEFORE INSTALLING FILLERS AND SPANDREL ADAPTERS FACE SEAL JOINTS AT ALL 4 CORNERS. ALSO SEAL SCREW HEAD AT TOP HALF OF HORIZONTAL

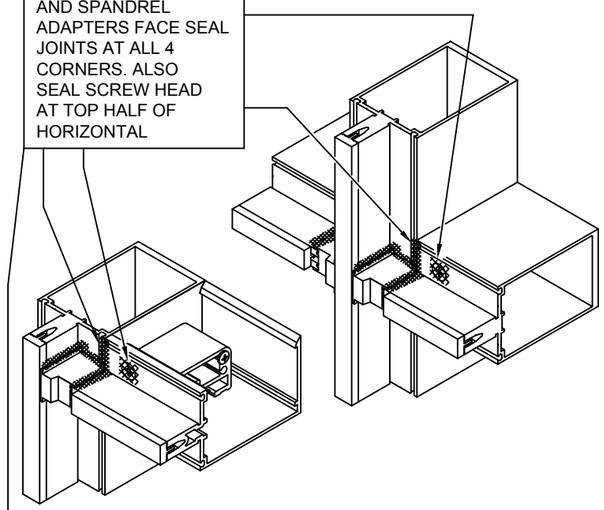

STRUCTURAL GLAZED VERTICALS

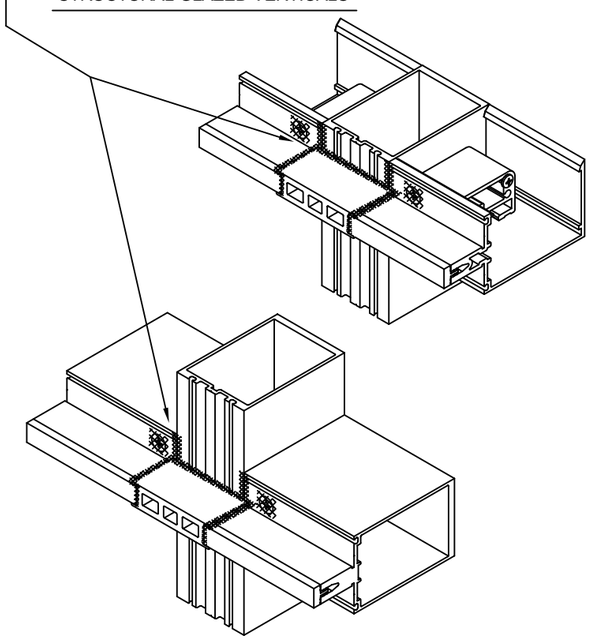

## STEP - 10 INSTALL PERIMETER FILLERS AND SPANDREL ADAPTERS WHERE APPLICABLE

CAPTURED VERTICALS

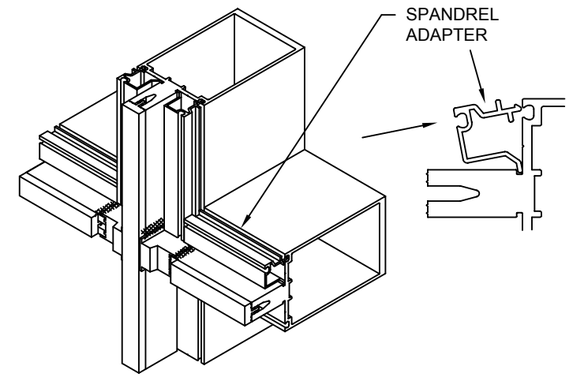


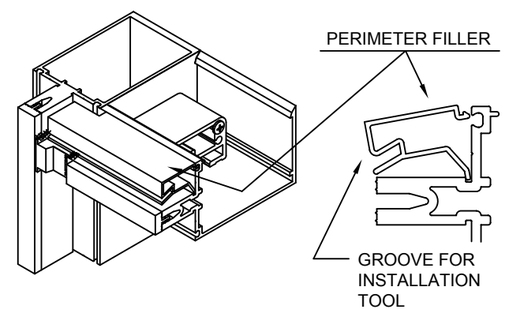


USE PUTTY KNIFE, SMALL PRY BAR OR SCREW DRIVER

## STEP - 10 INSTALL PERIMETER FILLERS AND SPANDREL ADAPTERS WHERE APPLICABLE

STRUCTURAL GLAZED VERTICALS

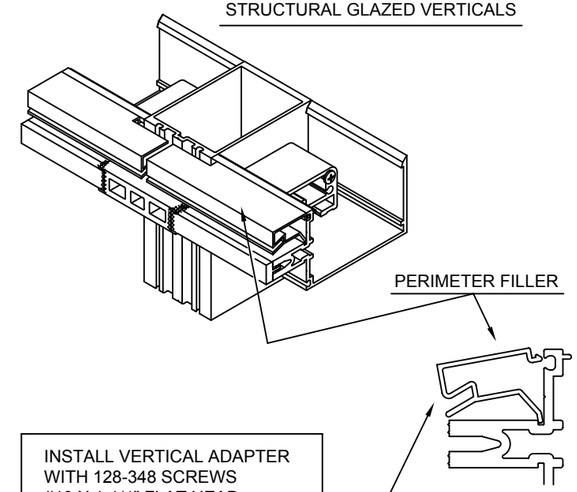


INSTALL VERTICAL ADAPTER WITH 128-348 SCREWS #10 X 1-1/4" FLAT HEAD SELF DRILLING SCREW. LOCATE A MAXIMUM 6" AND A MINIMUM 4" FROM EACH END AND 9" ON CENTER

AT STEEL REINFORCING USE 128-401 #10 X 1" FLAT HEAD TYPE B SCREW. DRILL .154 DIA. #23 DRILL INTO MULLION USING ADAPTER HOLES AS A PILOT

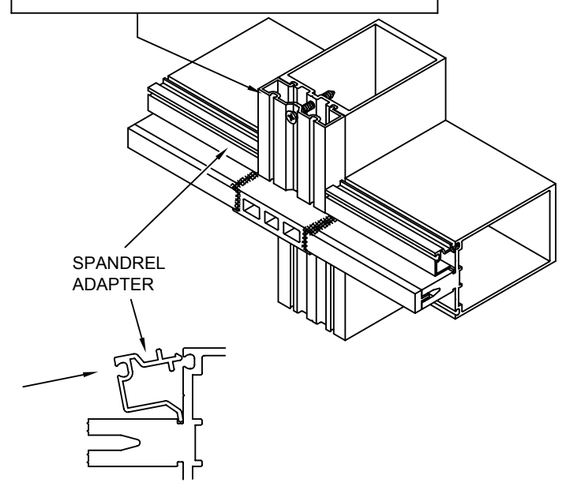


KAWNEER

1600 SYSTEM 2

INSTALLATION INSTRUCTIONS

PART NO.
162-971 6 OF 12

95449-69
10/20/07

DRAWING:

ORDER:

SHT:

## STEP - 11 SEAL INTERIOR OF VERTICAL SPLICE JOINTS

CAPTURED VERTICALS

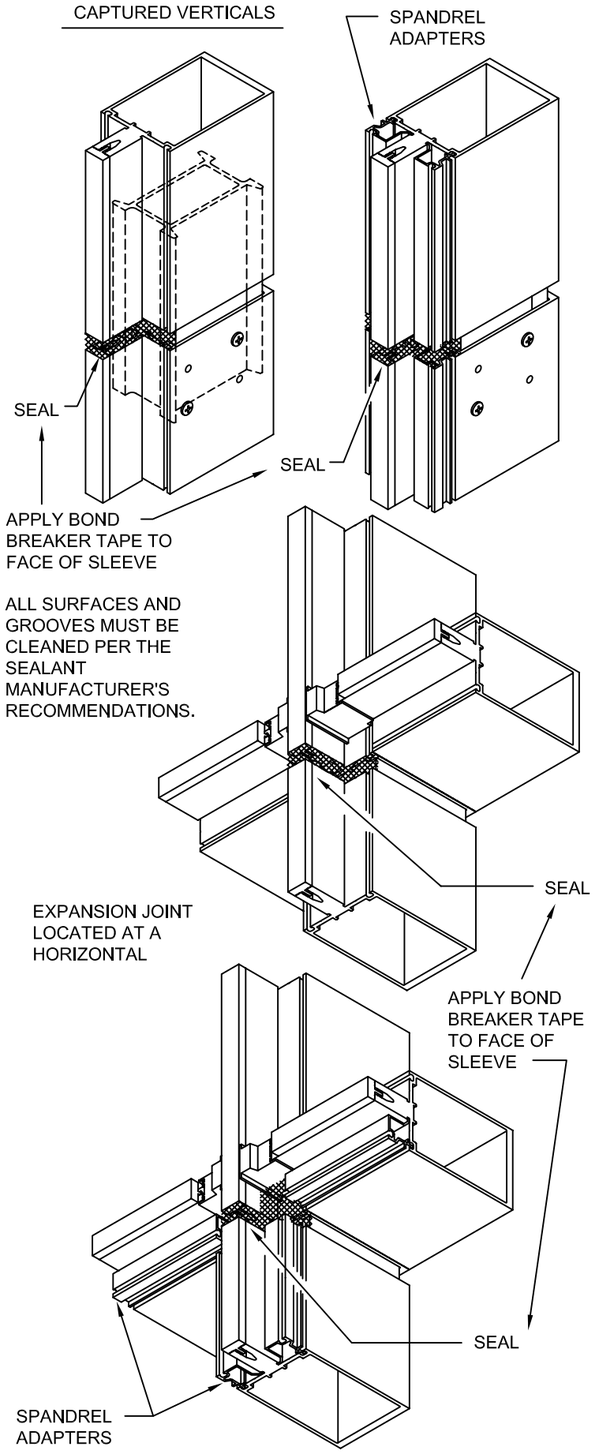


## STEP - 12 INSTALL INTERIOR GLAZING GASKETS

GASKETS SHOULD BE INSTALLED JUST PRIOR TO GLASS TO AVOID CONTAMINATION BY JOB SITE DEBRIS. GASKET GROOVES AND POCKETS SHOULD BE CLEAN.

IN TEMPERATURES COLDER THAN 50° F ARRANGEMENTS SHOULD BE MADE TO WARM GASKETS BEFORE INSTALLATION. THIS WILL PREVENT EXCESSIVE GLAZING PRESSURE ON THE GLASS DUE TO COLD, STIFF RUBBER GASKETS.

GASKETS CAN BECOME DEFORMED DURING STORAGE IN CARTONS. THEY SHOULD BE REMOVED FROM CARTONS SEVERAL HOURS PRIOR TO GLAZING AND LAID FLAT OR HUNG TO ALLOW RECOVERY OF CORRECT SHAPE. TEMPERATURES SHOULD BE AT LEAST 50° F TO ALLOW THIS.

027-850 GASKET INSTALLED LENGTH TO BE DAYLITE OPENING. GASKETS TO BE CUT LONG FOR SOME "CROWD-IN". GASKETS SHOULD NEVER BE " STRETCHED TO FIT".

"CROWD-IN" TO BE 1/8" PER FOOT UP TO 5"-0", 3/16" PER FOOT UP TO 8'-O", 1/4" PER FOOT OVER 8'-0".

GASKET'S LENGTH AT STRUCTURAL GLAZED VERTICALS TO BE DAYLITE OPENING PLUS 1 3/8".

CAPTURED VERTICALS

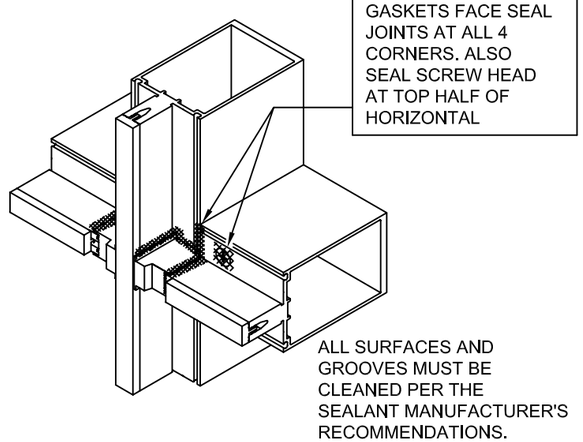


TYPICAL

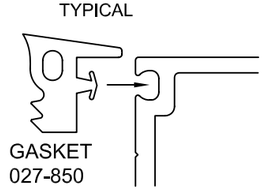

GASKET
027-850

PERIMETER WHERE APPLICABLE

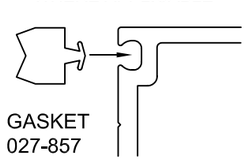

GASKET
027-857

## STEP - 12 INSTALL INTERIOR GLAZING GASKETS

CAPTURED VERTICALS

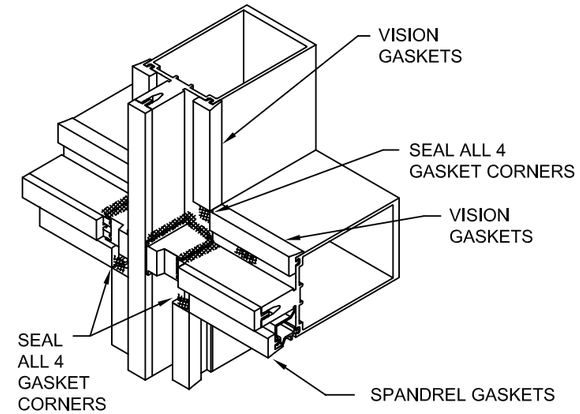


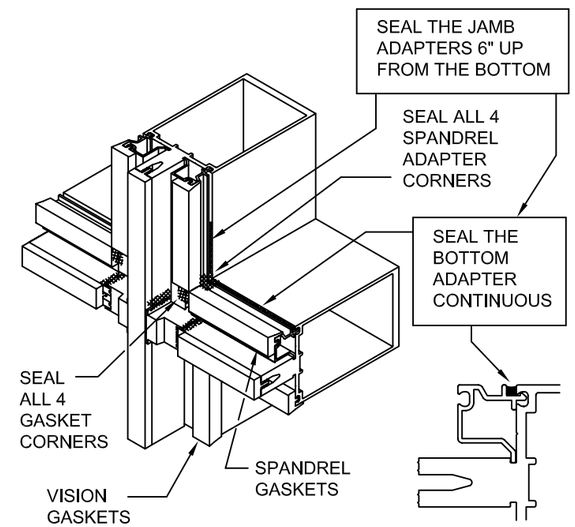


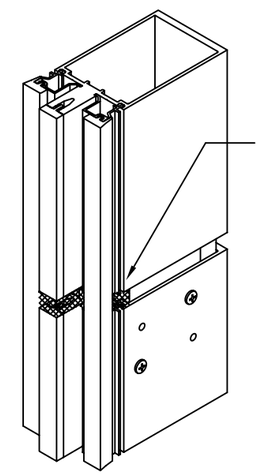


## STEP - 12 INSTALL INTERIOR GLAZING GASKETS

STRUCTURAL GLAZED VERTICALS

ALL SURFACES AND GROOVES MUST BE CLEANED PER THE SEALANT MANUFACTURER'S RECOMMENDATIONS.

JUST BEFORE INSTALLING VERTICAL AND HORIZONTAL GASKETS FACE SEAL JOINTS AT ALL 4 CORNERS. ALSO SEAL SCREW HEAD AT TOP HALF OF HORIZONTAL

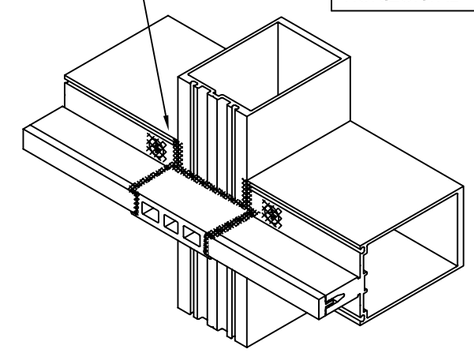

VERTICAL GASKETS TO RUN DAYLIGHT OPENING PLUS 1 3/8"

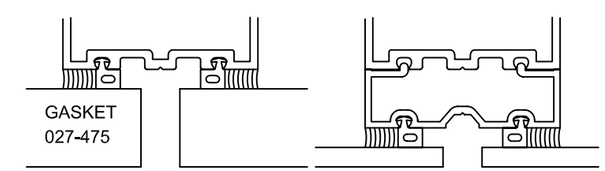


VISION AT INTERIOR STRUCTURAL SEAL

SPANDREL AT INTERIOR STRUCTURAL SEAL

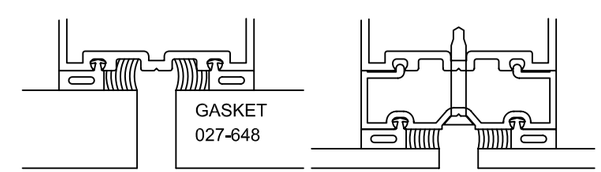


VISION AT EXTERIOR STRUCTURAL SEAL

SPANDREL AT EXTERIOR STRUCTURAL SEAL

KAWNEER

1600 SYSTEM 2
INSTALLATION INSTRUCTIONS

PART NO.
162-971 7 OF 12

95449-68
08/17/07

DRAWING:

ORDER:

SHT:

## STEP - 12 INSTALL INTERIOR GLAZING GASKETS

STRUCTURAL GLAZED VERTICALS

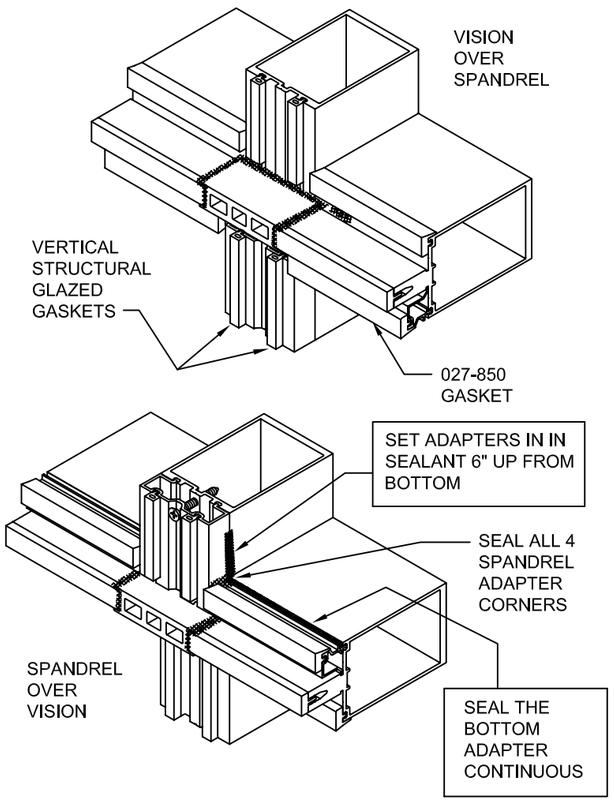


## STEP - 13 INSTALL INTERIOR SPONGE AIR SEALS

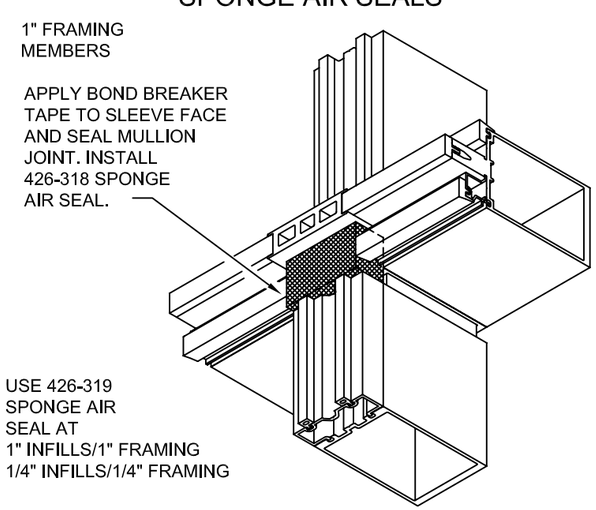


## STEP - 14 INSTALL SETTING BLOCKS

STRUCTURAL GLAZED VERTICALS

DETAILS SIMILAR FOR "CAPTURED VERTICALS"

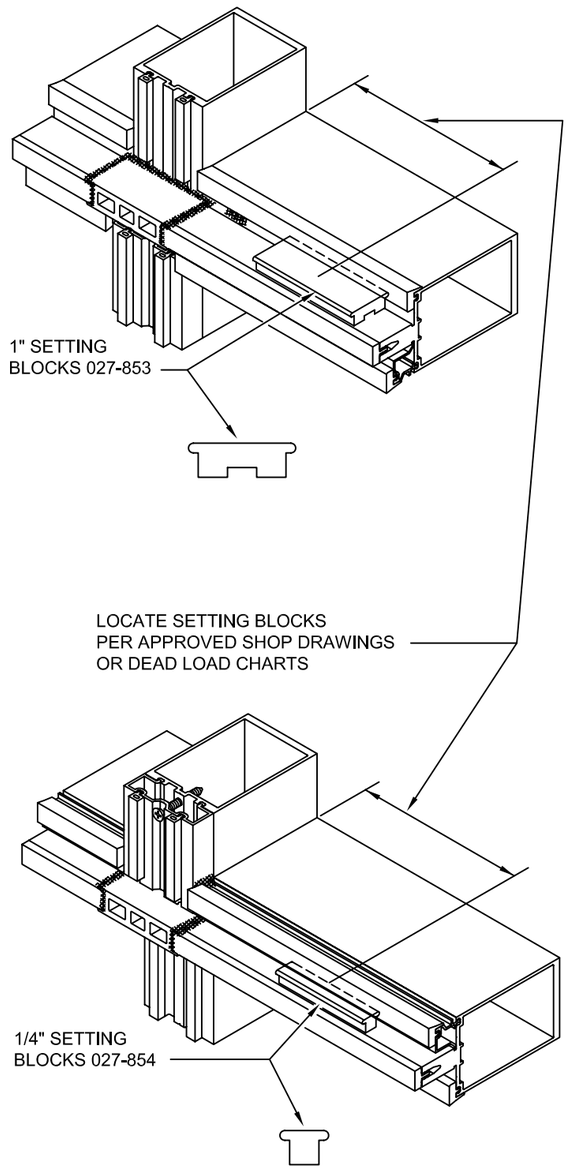


## STEP - 15 INSTALL EXTERIOR GASKETS INTO PRESSURE PLATES

REFERENCE GASKET NOTES IN STEP 12 SAME NOTES APPLY.

REFERENCE INSTRUCTIONS 162-983 FOR EXTERIOR FRAME PERIMETERS

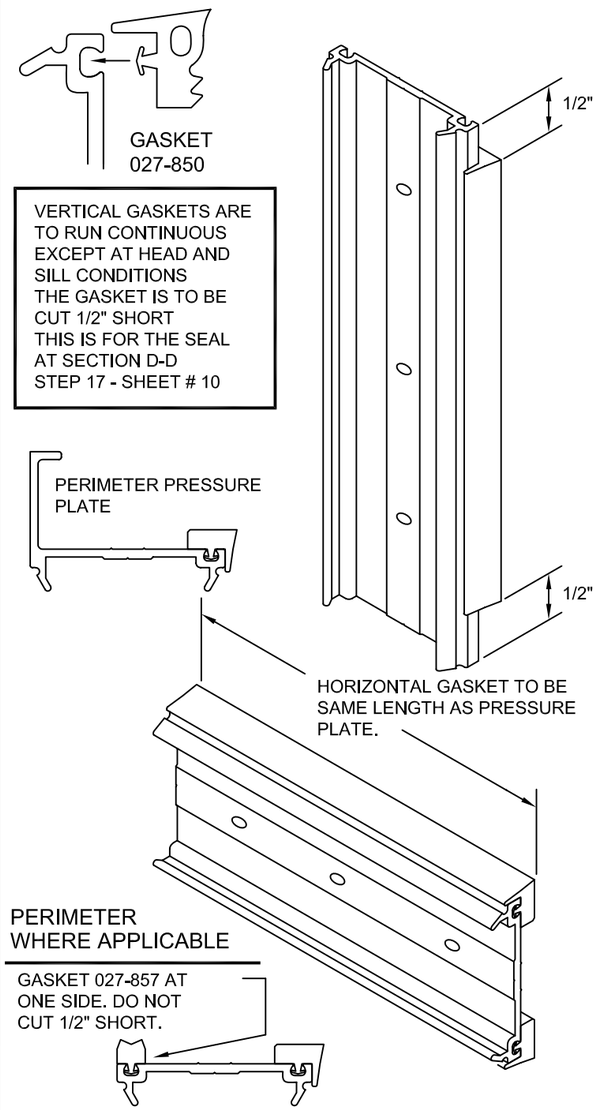


VERTICAL GASKETS ARE TO RUN CONTINUOUS EXCEPT AT HEAD AND SILL CONDITIONS THE GASKET IS TO BE CUT 1/2" SHORT THIS IS FOR THE SEAL AT SECTION D-D STEP 17 - SHEET # 10

## STEP - 16 INSTALL GLASS

CAPTURED VERTICALS

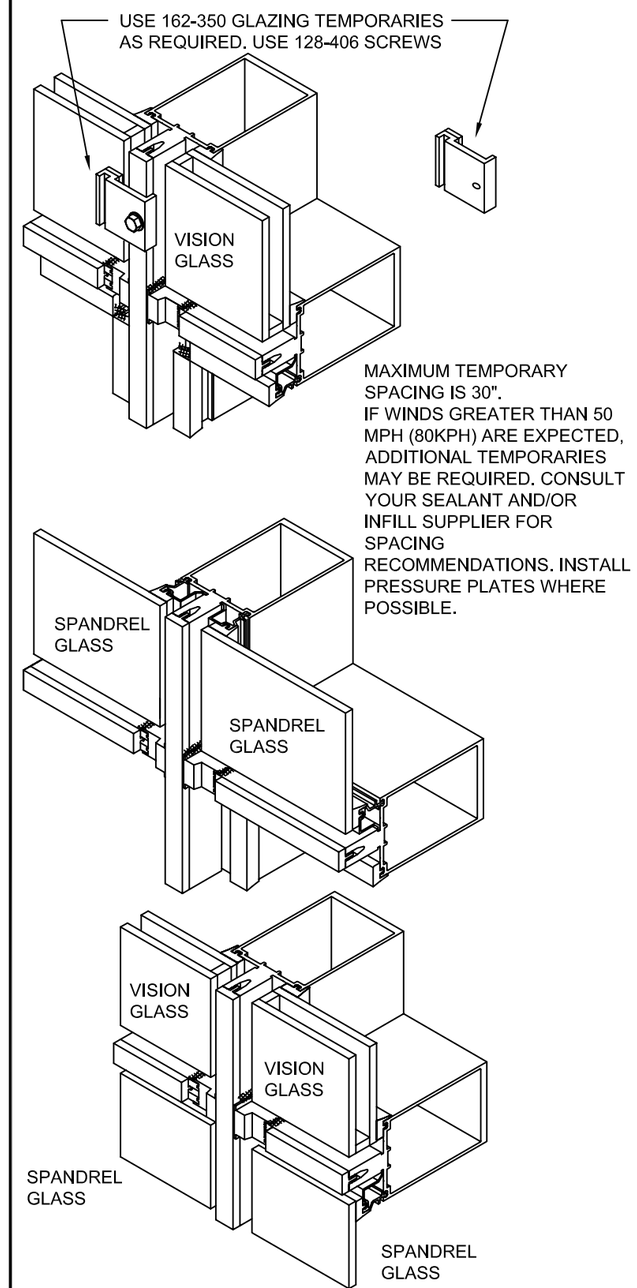


MAXIMUM TEMPORARY SPACING IS 30". IF WINDS GREATER THAN 50 MPH (80KPH) ARE EXPECTED, ADDITIONAL TEMPORARIES MAY BE REQUIRED. CONSULT YOUR SEALANT AND/OR INFILL SUPPLIER FOR SPACING RECOMMENDATIONS. INSTALL PRESSURE PLATES WHERE POSSIBLE.

KAWNEER

1600 SYSTEM 2

INSTALLATION INSTRUCTIONS

PART NO. 162-971 8 OF 12

95449-68
08/17/07

DRAWING:

ORDER:

SHT:

## STEP - 16 INSTALL GLASS

STRUCTURAL GLAZED VERTICALS

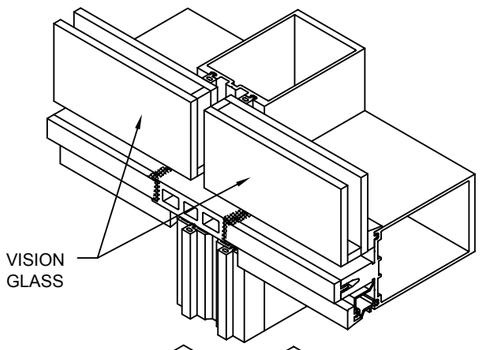


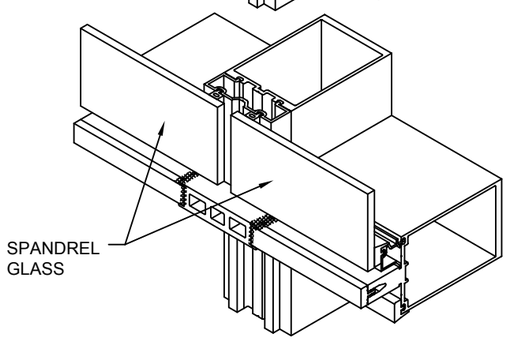


STRUCTURAL GLAZED VERTICALS

TEMPORARY RETAINERS FOR STRUCTURAL GLAZED VERTICALS.

THE LOCATION OF TEMPORARY EXTERIOR INFILL RETAINERS SHOULD BE AT A MAXIMUM SPACING OF 30" ON CENTER.

IF WINDS GREATER THAN 50 MPH (80KPH) ARE EXPECTED, ADDITIONAL TEMPORARIES MAY BE REQUIRED. CONSULT YOUR SEALANT AND/OR INFILL SUPPLIER FOR SPACING RECOMMENDATIONS.

GLAZING TEMPORARY
162-353

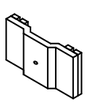

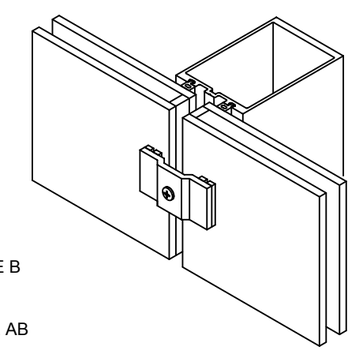

INSTALL WITH
SCREWS 128-400
AT 1" GLASS
#12 X 2-1/4 PH HD TYPE B
USE SCREW 128-284
AT 1/4" GLASS
#12 X 1-1/2 FL HD TYPE AB

AT CORNERS AND SPLAYS RETAINERS SHOULD BE MADE FROM A GOOD QUALITY HARDWOOD. THESE RETAINERS ARE NOT SUPPLIED BY KAWNEER.

## STEP - 17 INSTALL EXTERIOR PRESSURE PLATES

RECOMMEND USING TORQUE LIMIT TOOL 162-399 SEE NOTE.

HOW TO SET TORQUE LIMIT

1. ATTACH ANY CALIBRATED TORQUE INDICATOR TO OUTPUT STUB (1) AND DETERMINE PRESENT TORQUE SETTING WHILE HOLDING THE BODY (5), OR VICE-VERSA.

2. REMOVE SNAP RING (2) AND LOCKING PLATE (3).

3. ADJUST NUT (4) WITH OPEN-END WRENCH : CLOCKWISE TO INCREASE TORQUE, COUNTER- CLOCKWISE TO DECREASE TORQUE.

4. OBTAIN NEW TORQUE READING WITH THE CALIBRATED TORQUE INDICATOR. REPEAT PRECEDING STEP IF MORE ADJUSTMENT IS NECESSARY TO REACH DESIRED LIMIT.

5. REPLACE LOCKING PLATE INTO NOTCHES AND INSTALL SNAP RING. IF LOCKING PLATE DOES NOT "SEAT", MOVE THE ADJUSTING NUT SLIGHTLY UNTIL IT DROPS IN PLACE. THE DIRECTION IS BEST DETERMINED BY WHETHER A MINIMUM TORQUE APPLICATION OR A MAXIMUM ONE IS DESIRED.

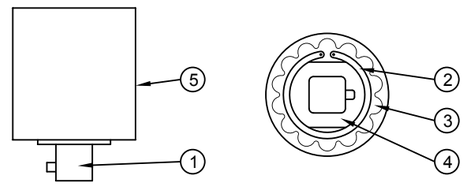


INSTALL PRESSURE PLATES USING SCREWS 128-406 1/4-14 X 1" HEX WASHER HEAD TYPE AB.

SCREWS ARE TO BE LOCATED 9" ON CENTER.
ALWAYS LOCATE A SCREW AS CLOSE AS POSSIBLE TO A HORIZONTAL JOINT. THIS WILL PROVIDE MAXIMUM PRESSURE FOR THE CRITICAL JOINT SEALS.

INSTALL HORIZONTAL PRESSURE PLATES WITH WEEP HOLES TOWARDS TOP OF HORIZONTAL.

AT EACH HORIZONTAL AND VERTICAL PRESSURE PLATE INSTALL TWO SCREWS PART WAY, THEN INSTALL THE THIRD SCREW ALL THE WAY, AND THEN TIGHTEN THE FIRST TWO SCREWS. THIS ELIMINATES LATERAL WALKING OF THE PRESSURE PLATE POSITION.

TORQUE ALL SCREWS TO 95 TO 100 INCH POUNDS. DURING COLD WEATHER, TORQUE SCREWS TO 50 INCH POUNDS UNTIL ALL 4 SIDES HAVE BEEN CLAMPED. THEN TORQUE SCREWS TO 95 TO 100 INCH POUNDS.

CAPTURED VERTICALS

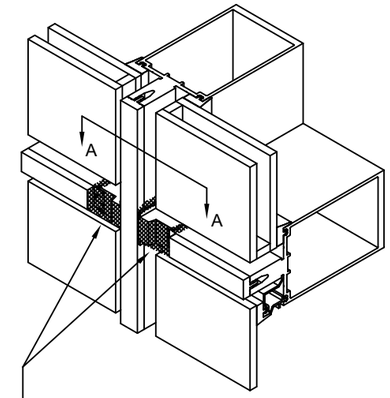


JUST BEFORE INSTALLING VERTICAL PRESSURE PLATES APPLY A GENEROUS AMOUNT OF SEALANT TO THE JOINT PLUG FACE FILLING JOINTS AS SHOWN.

CLEAN JOINT PER SEALANT MANUFACTURER'S RECOMMENDATIONS

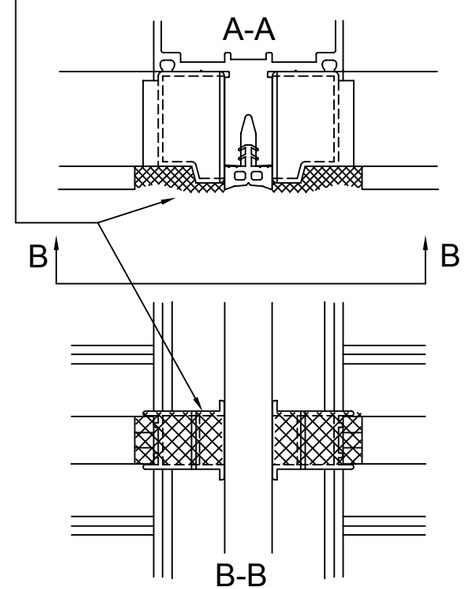


INSTALL VERTICAL PRESSURE PLATES AT CAPTURED VERTICALS

NOTE - THE TORQUE LIMIT TOOL WAS DESIGNED TO BE USED WITH A HAND DRIVEN DEVICE. THE TOOL CAN BE ADAPTED TO A DRILL MOTOR IF USED AT A MAXIMUM SPEED OF APPROX. 300 RPM. HIGHER SPEEDS CAN CAUSE OVERHEATING AND AFFECT THE ACCURACY. AFTER APPROX. 1 HOUR OF TOOL USAGE CHECK TORQUE SETTINGS WITH A TORQUE WRENCH.

INTERMEDIATE HORIZONTAL
VISION OVER SPANDREL

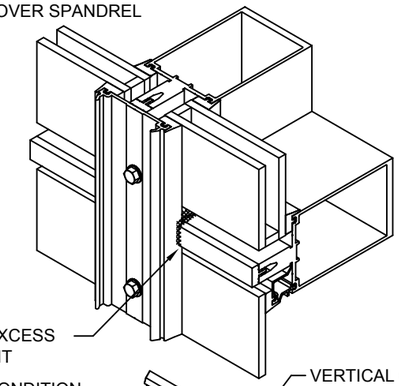


HEAD CONDITION
SILL SAME

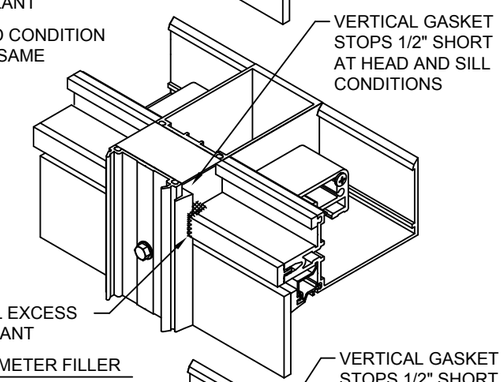


PERIMETER FILLER

HEAD CONDITION
SILL SAME

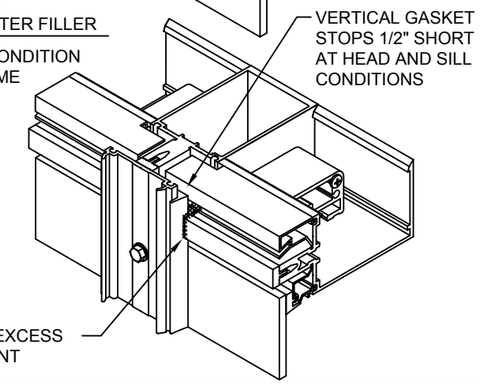


KAWNEER

1600 SYSTEM 2

INSTALLATION INSTRUCTIONS

PART NUMBER
162-971 9 OF 12

95449-69
10/20/07

DRAWING:

ORDER:

SHT:

# STEP - 17 INSTALL EXTERIOR PRESSURE PLATES

INSTALL VERTICAL PRESSURE PLATES
AT CAPTURED VERTICALS

VERTICAL EXPANSION JOINTS

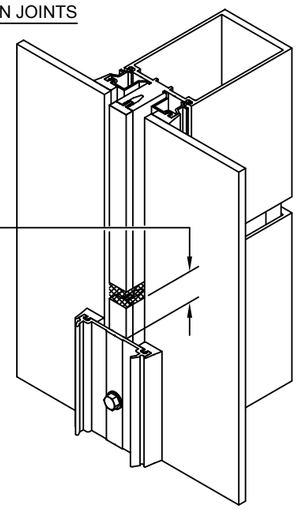


AT TOP PRESSURE PLATE
LOCATE SCREW CLOSE TO
THE MULLION JOINT BUT
NOT BELOW THE JOINT.

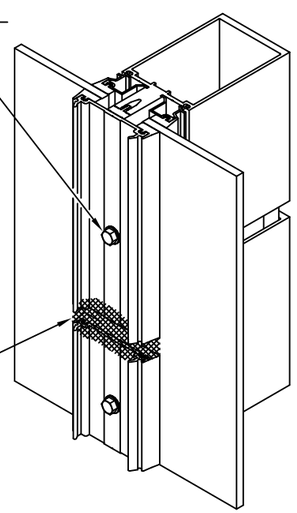


INSTALL HORIZONTAL PRESSURE PLATES
AT CAPTURED VERTICALS

CENTER HORIZONTAL PRESSURE PLATES
SO END GAPS ARE EQUAL.

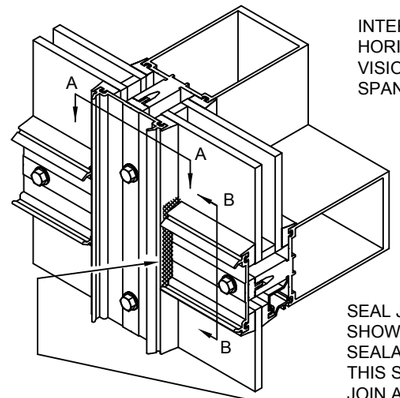


INTERMEDIATE
HORIZONTAL
VISION OVER
SPANDREL

SEAL JOINTS AS
SHOWN. TOOL
SEALANT.
THIS SEAL IS TO
JOIN AND ADHERE
TO THE JOINT
PLUG SEALS.

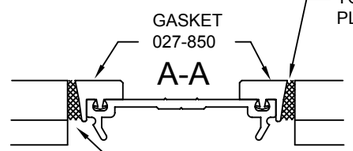


CLEAN JOINT
PER SEALANT
MANUFACTURER'S
RECOMMENDATIONS

DO NOT LET THE SEAL
INTERFERE WITH THE COVER SNAP.

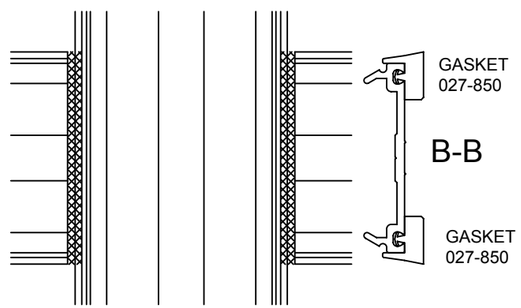


FACE VIEW

PERIMETER FILLER
HEAD HORIZONTAL
SILL SAME

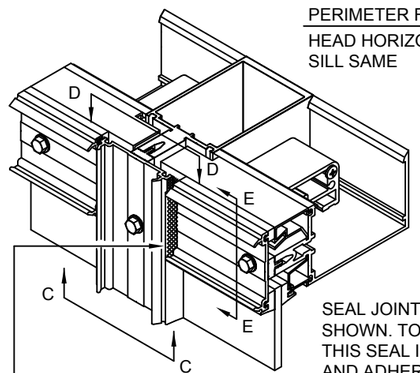


SEAL JOINTS AS
SHOWN. TOOL SEALANT.
THIS SEAL IS TO JOIN
AND ADHERE TO THE
JOINT PLUG SEALS.

REFERENCE INSTRUCTIONS 162-983
FOR EXTERIOR FRAME PERIMETERS

SEAL BETWEEN PRESSURE
PLATE AND HEAD/SILL END
CAP AS SHOWN.

HEAD HORIZONTAL
SILL SAME

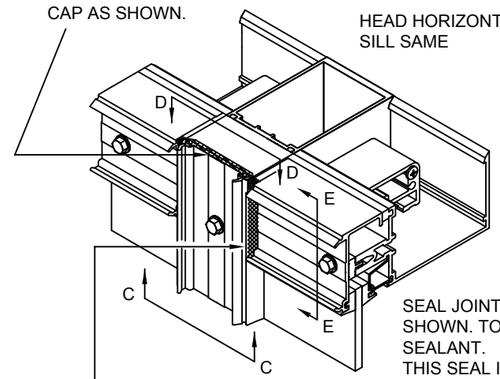


SEAL JOINTS AS
SHOWN. TOOL
SEALANT.
THIS SEAL IS TO
JOIN AND ADHERE
TO THE JOINT
PLUG SEALS.

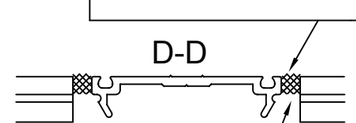


CLEAN JOINT
PER SEALANT
MANUFACTURER'S
RECOMMENDATIONS

DO NOT LET THE SEAL
INTERFERE WITH THE COVER SNAP.

VERTICAL GASKET
STOPS 1/2"
SHORT OF END.

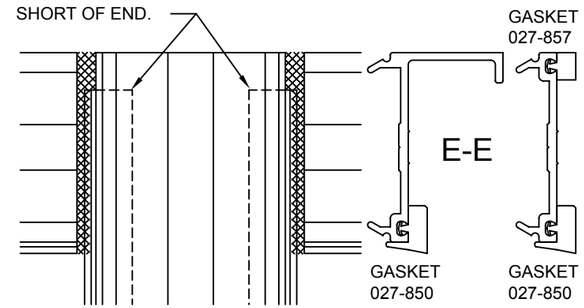


FACE VIEW

DO NOT LET THE SEAL
INTERFERE WITH THE COVER SNAP.

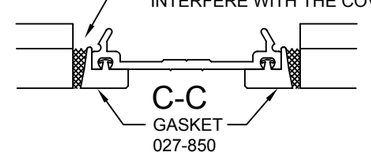


INSTALL HORIZONTAL PRESSURE PLATES
AT SSG VERTICALS

NOTE - THE TORQUE LIMIT TOOL WAS DESIGNED
TO BE USED WITH A HAND DRIVEN DEVICE.
THE TOOL CAN BE ADAPTED TO A DRILL MOTOR
IF USED AT A MAXIMUM SPEED OF APPROX.
300 RPM. HIGHER SPEEDS CAN CAUSE
OVERHEATING AND AFFECT THE ACCURACY. AFTER
APPROX. 1 HOUR OF TOOL USAGE CHECK
TORQUE SETTINGS WITH A TORQUE WRENCH.

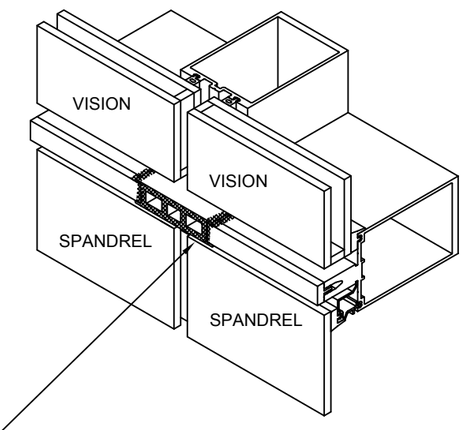


JUST BEFORE APPLYING PRESSURE PLATE
APPLY A GENEROUS AMOUNT OF
SEALANT TO THE JOINT PLUG FACE.

CLEAN JOINT PER SEALANT
MANUFACTURER'S RECOMMENDATIONS

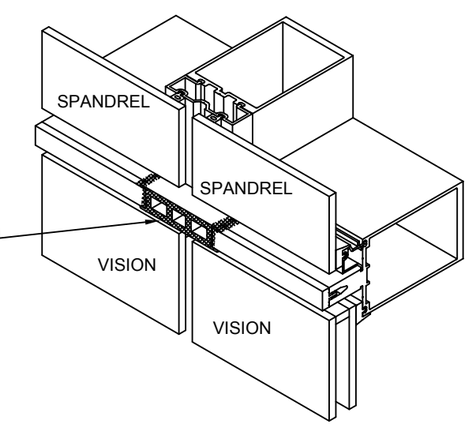


KAWNEER

1600 SYSTEM 2

INSTALLATION INSTRUCTIONS

PART NUMBER
162-971 10 OF 12

95449-69
10/20/07

DRAWING:

ORDER:

SHT:

## STEP - 17 INSTALL EXTERIOR PRESSURE PLATES

INSTALL HORIZONTAL PRESSURE PLATES

AT SSG VERTICALS

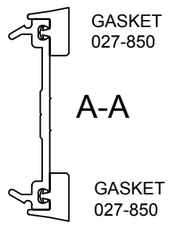


VISION

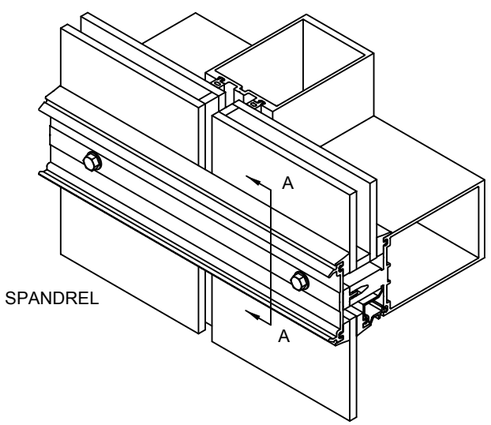


VISION

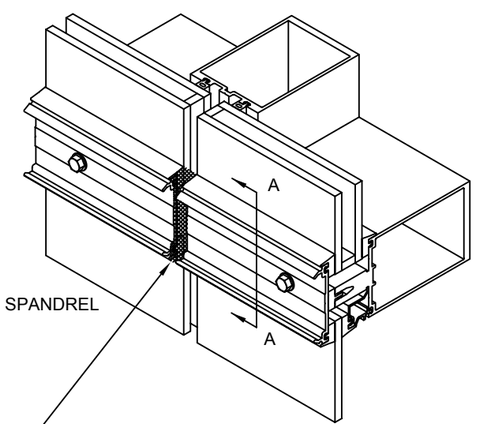


COMPLETELY SEAL HORIZONTAL PRESSURE PLATE JOINT. DO NOT LET SEALANT INTERFERE WITH COVER SNAP

CLEAN JOINT PER SEALANT MANUFACTURER'S RECOMMENDATIONS

INSTALL HORIZONTAL PRESSURE PLATES

AT SSG VERTICALS

REFERENCE INSTRUCTIONS 162-983 FOR EXTERIOR FRAME PERIMETERS

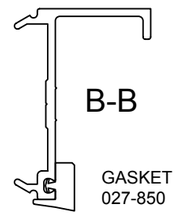


HEAD HORIZONTAL SILL SAME

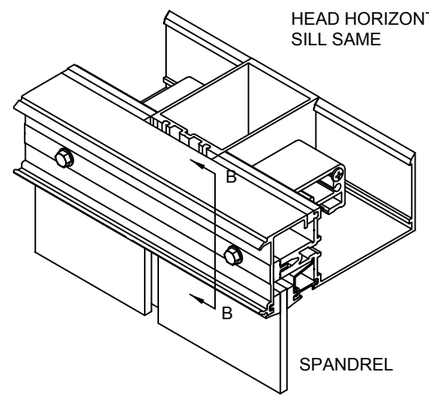


HEAD HORIZONTAL SILL SAME

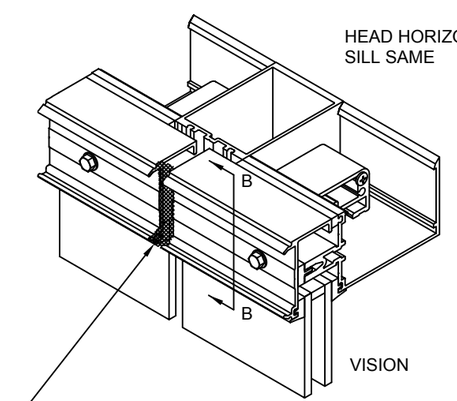


COMPLETELY SEAL HORIZONTAL PRESSURE PLATE JOINT. DO NOT LET SEALANT INTERFERE WITH COVER SNAP

CLEAN JOINT PER SEALANT MANUFACTURER'S RECOMMENDATIONS

INSTALL HORIZONTAL PRESSURE PLATES

AT SSG VERTICALS

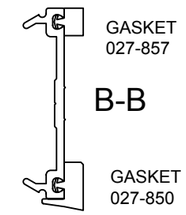


PERIMETER FILLER

HEAD HORIZONTAL SILL SAME

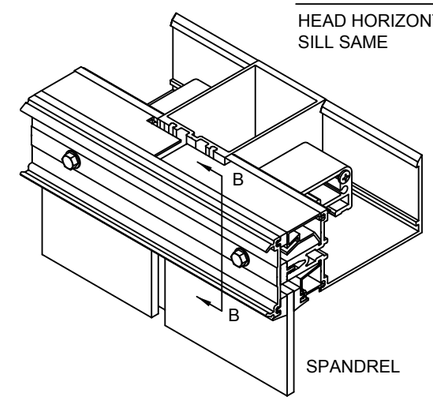


PERIMETER FILLER

HEAD HORIZONTAL SILL SAME

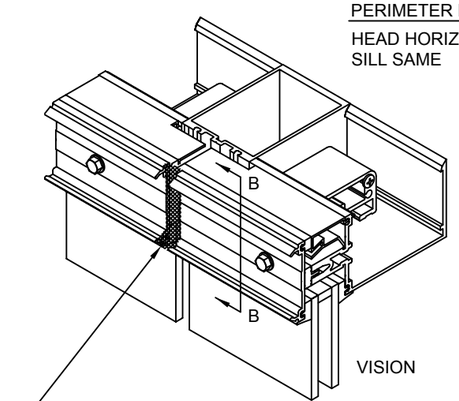


COMPLETELY SEAL HORIZONTAL PRESSURE PLATE JOINT. DO NOT LET SEALANT INTERFERE WITH COVER SNAP

CLEAN JOINT PER SEALANT MANUFACTURER'S RECOMMENDATIONS

## STEP - 18 INSTALL PERIMETER SEALS

PERIMETER WEATHER SEALS ARE INSTALLED AT THE PRESSURE PLATE LOCATION AS DETAILED BELOW. (THIS SEAL SHOULD BE INSTALLED BEFORE COVERS ARE APPLIED WHEN COVERS DEEPER THAN 3/4" ARE USED) EXTERIOR COSMETIC SEALS AT THE COVER MAY BE APPLIED AT THE HEAD AND JAMBS ONLY. SILL COVERS MUST REMAIN OPEN TO ALLOW WATER DRAINAGE TO THE EXTERIOR.

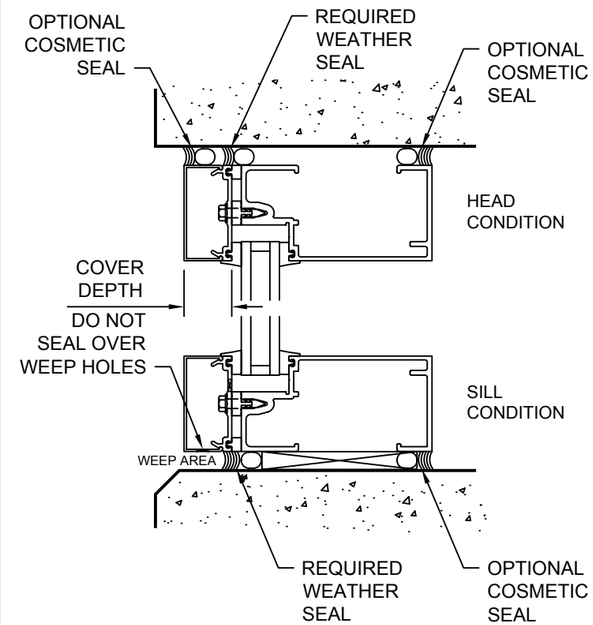


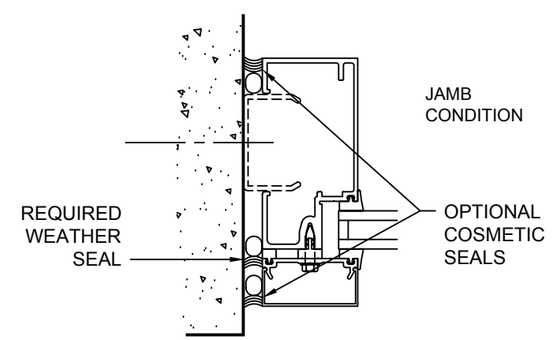


KAWNEER

1600 SYSTEM 2

INSTALLATION INSTRUCTIONS

PART NO.
162-971 11 OF 12

95449-87
02/17/12

DRAWING:

ORDER:

SHT:

## STEP - 19 INSTALL EXTERIOR COVERS

CAPTURED VERTICALS

CARE MUST BE TAKEN TO AVOID DAMAGE TO COVERS DURING INSTALLATION.
USE A 18" LONG PIECE OF 2 X 4 WOOD ALONG WITH A HAMMER OR MALLET TO SEAT THE COVER.

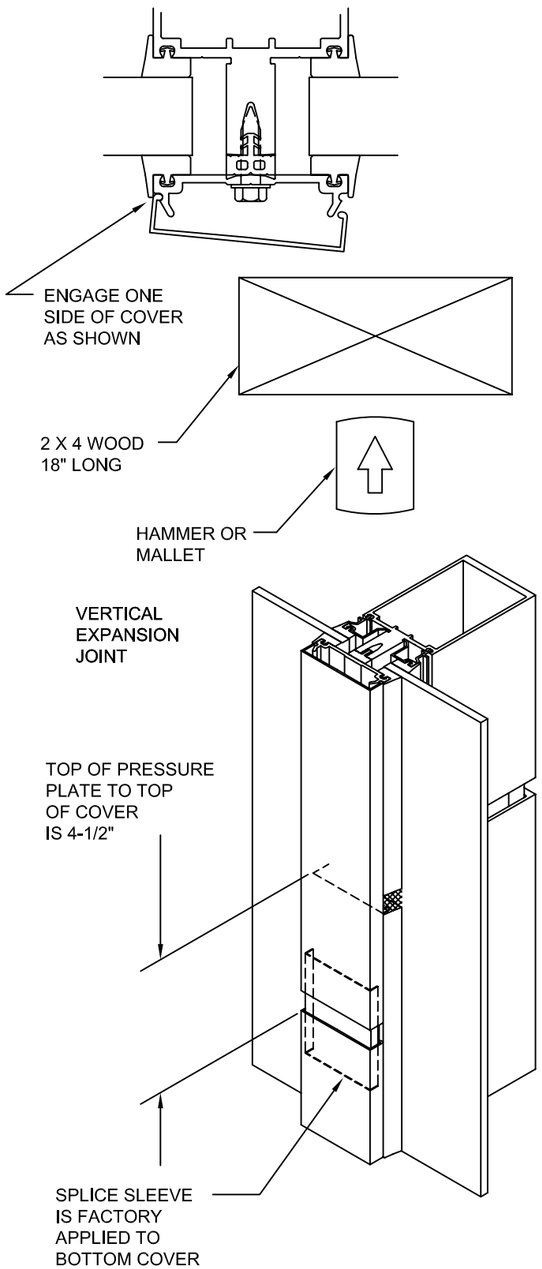


## STEP - 19 INSTALL EXTERIOR COVERS

PINNING OF ALL VERTICAL COVERS IS REQUIRED FOR BOTH SIDES. DRILL A .106 DIA. HOLE (#36 DRILL) AND INSTALL 128-920 SCREWS #6 X 3/8" PAN HEAD TYPE B. LOCATE PINNING AT A HORIZONTAL CLOSEST TO THE COVER HEIGHT CENTER.

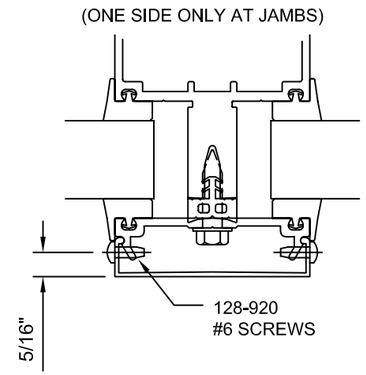


NOTE FOR 5" SIGHTLINE COVERS
DUE TO LARGE EXTRUSION TOLERANCES, 5" SIGHTLINE COVERS MAY REQUIRE SEALANT OR PINNING TO HOLD IN PLACE.

INSTALL HORIZONTAL COVERS WITH THE WEEP HOLES DOWN

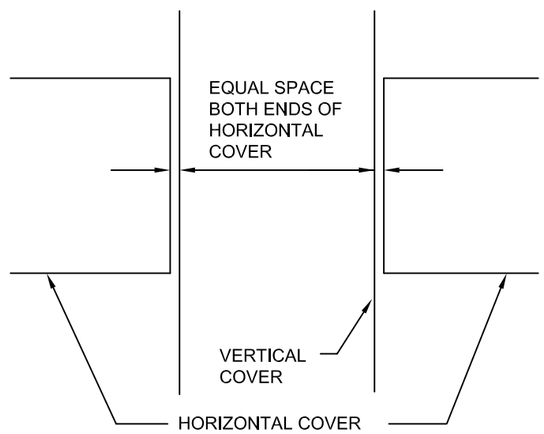


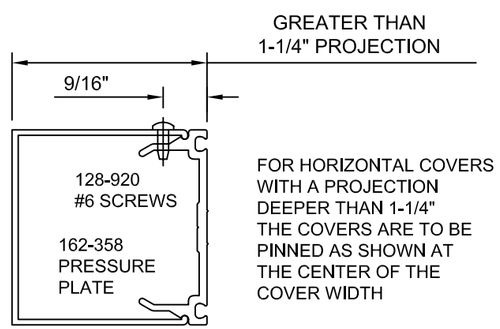


FOR HORIZONTAL COVERS WITH A PROJECTION DEEPER THAN 1-1/4" THE COVERS ARE TO BE PINNED AS SHOWN AT THE CENTER OF THE COVER WIDTH

## STEP - 19 INSTALL EXTERIOR COVERS

STRUCTURAL GLAZED VERTICALS

INSTALL HORIZONTAL COVERS WITH THE WEEP HOLES DOWN

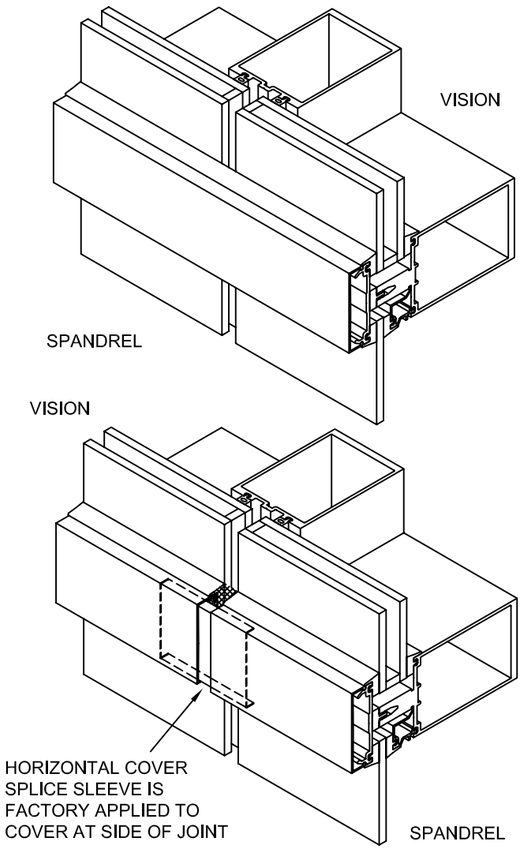


## REMOVING COVERS

COVERS CAN BE SAVED IF TOLERANCES ARE NOT TOO TIGHT AND THE COVER IS REMOVED WITH EXTREME CARE

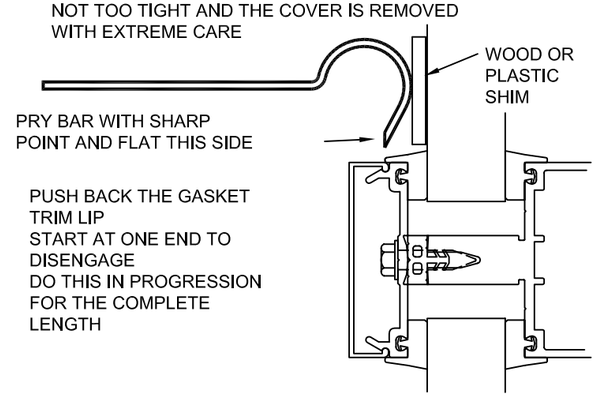


PUSH BACK THE GASKET TRIM LIP
START AT ONE END TO DISENGAGE
DO THIS IN PROGRESSION FOR THE COMPLETE LENGTH

## STEP - 20 INSTALL STRUCTURAL AND WEATHER SEALS

KAWNEER DOES NOT SUPPLY SEALANT.
SEALANT TO BE SILICONE AS RECOMMENDED BY THE SEALANT MANUFACTURER.
INFILL AND METAL TO BE CLEANED PER THE SEALANT MANUFACTURER'S RECOMMENDATIONS.
SEALANT BACKUP ROD TO BE PER THE SEALANT MANUFACTURER'S RECOMMENDATIONS.

FILL SPACE BETWEEN INSULATED UNITS AND BEHIND SINGLE GLAZED UNITS WITH RECOMMENDED BACKUP ROD.
APPLY STRUCTURAL SEAL AND WEATHER SEAL AS SHOWN.
ALLOW STRUCTURAL SEAL TO CURE PER SEALANT MANUFACTURER'S RECOMMENDATIONS.
THEN REMOVE TEMPORARY RETAINERS, SEAL FASTENER HOLES AND FILL WEATHER SEAL HOLES.

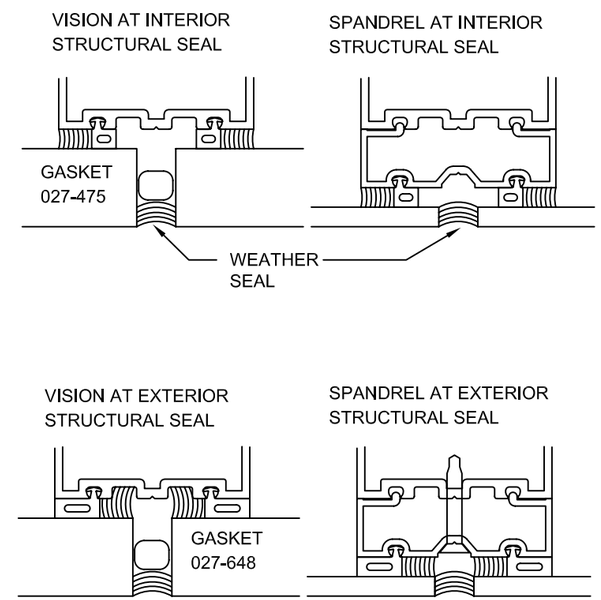


EXTERIOR STRUCTURAL SEAL MUST BE APPLIED IN THREE STEPS.
EACH SIDE SEPARATELY THEN THE WEATHER SEAL

KAWNEER

1600 SYSTEM 2
INSTALLATION INSTRUCTIONS

PART NO.
162-971 12 OF 12

95449-68
08/17/07

DRAWING:

ORDER:

SHT: